H E A D Q U A R T E R S
P H I L I P P I N E A R M Y
OFFICE OF THE PHILIPPINE ARMY BIDS AND AWARDS COMMITTEE 2
Fort Andres Bonifacio, Metro Manila

PROCUREMENT OF CARTRIDGE, 81MM: ILLUM

ORD PABAC2-005-23

Lot	Description	Qty (rds)	ABC (Pesos)
1	Ctg, 81mm: Illum	3,000	54,000,000.00

BIDDING DATE: November 3, 2022
TIME: 1:30 PM

Sixth Edition
July 2020

TABLE OF CONTENTS

GLOSSARY OF ACRONYMS, TERMS, AND ABBREVIATIONS ……3

SECTION I. INVITATION TO BID……..……..6

SECTION II. INSTRUCTIONS TO BIDDERS……..…..…9

SECTION III. BID DATA SHEET ……..……16

SECTION IV. GENERAL CONDITIONS OF CONTRACT ……19

SECTION V. SPECIAL CONDITIONS OF CONTRACT ……...…21

SECTION VI. SCHEDULE OF REQUIREMENTS ……..…31

SECTION VII. TECHNICAL SPECIFICATIONS ……..……..…32

SECTION VIII. CHECKLIST OF TECHNICAL
AND FINANCIAL DOCUMENTS …….……48

GLOSSARY OF ACRONYMS, TERMS, AND ABBREVIATIONS

ABC – Approved Budget for the Contract.

BAC – Bids and Awards Committee.

Bid – A signed offer or proposal to undertake a contract submitted by a bidder in response to and in consonance with the requirements of the bidding documents. Also referred to as *Proposal* and *Tender.* (2016 revised IRR, Section 5[c])

Bidder – Refers to a contractor, manufacturer, supplier, distributor and/or consultant who submits a bid in response to the requirements of the Bidding Documents. (2016 revised IRR, Section 5[d])

Bidding Documents – The documents issued by the Procuring Entity as the bases for bids, furnishing all information necessary for a prospective bidder to prepare a bid for the Goods, Infrastructure Projects, and/or Consulting Services required by the Procuring Entity. (2016 revised IRR, Section 5[e])

BIR – Bureau of Internal Revenue.

BSP – Bangko Sentral ng Pilipinas.

Consulting Services – Refer to services for Infrastructure Projects and other types of projects or activities of the GOP requiring adequate external technical and professional expertise that are beyond the capability and/or capacity of the GOP to undertake such as, but not limited to: (i) advisory and review services; (ii) pre-investment or feasibility studies; (iii) design; (iv) construction supervision; (v) management and related services; and (vi) other technical services or special studies. (2016 revised IRR, Section 5[i])

CDA - Cooperative Development Authority.

Contract – Refers to the agreement entered into between the Procuring Entity and the Supplier or Manufacturer or Distributor or Service Provider for procurement of Goods and Services; Contractor for Procurement of Infrastructure Projects; or Consultant or Consulting Firm for Procurement of Consulting Services; as the case may be, as recorded in the Contract Form signed by the parties, including all attachments and appendices thereto and all documents incorporated by reference therein.

CIF – Cost Insurance and Freight.

CIP – Carriage and Insurance Paid.

CPI – Consumer Price Index.

DDP – Refers to the quoted price of the Goods, which means “delivered duty paid.”

DTI – Department of Trade and Industry.

EXW – Ex works.

FCA – “Free Carrier” shipping point.

FOB – “Free on Board” shipping point.

Foreign-funded Procurement or Foreign-Assisted Project– Refers to procurement whose funding source is from a foreign government, foreign or international financing institution as specified in the Treaty or International or Executive Agreement. (2016 revised IRR, Section 5[b]).

Framework Agreement – Refers to a written agreement between a procuring entity and a supplier or service provider that identifies the terms and conditions, under which specific purchases, otherwise known as “Call-Offs,” are made for the duration of the agreement. It is in the nature of an option contract between the procuring entity and the bidder(s) granting the procuring entity the option to either place an order for any of the goods or services identified in the Framework Agreement List or not buy at all, within a minimum period of one (1) year to a maximum period of three (3) years. (GPPB Resolution No. 27-2019)

GFI – Government Financial Institution.

GOCC – Government-owned and/or –controlled corporation.

Goods – Refer to all items, supplies, materials and general support services, except Consulting Services and Infrastructure Projects, which may be needed in the transaction of public businesses or in the pursuit of any government undertaking, project or activity, whether in the nature of equipment, furniture, stationery, materials for construction, or personal property of any kind, including non-personal or contractual services such as the repair and maintenance of equipment and furniture, as well as trucking, hauling, janitorial, security, and related or analogous services, as well as procurement of materials and supplies provided by the Procuring Entity for such services. The term “related” or “analogous services” shall include, but is not limited to, lease or purchase of office space, media advertisements, health maintenance services, and other services essential to the operation of the Procuring Entity. (2016 revised IRR, Section 5[r])

GOP – Government of the Philippines.

GPPB – Government Procurement Policy Board.

INCOTERMS – International Commercial Terms.

Infrastructure Projects – Include the construction, improvement, rehabilitation, demolition, repair, restoration or maintenance of roads and bridges, railways, airports, seaports, communication facilities, civil works components of information technology projects, irrigation, flood control and drainage, water supply, sanitation,

sewerage and solid waste management systems, shore protection, energy/power and electrification facilities, national buildings, school buildings, hospital buildings, and other related construction projects of the government. Also referred to as *civil works or works*. (2016 revised IRR, Section 5[u])

LGUs – Local Government Units.

NFCC – Net Financial Contracting Capacity.

NGA – National Government Agency.

PhilGEPS - Philippine Government Electronic Procurement System.

Procurement Project – refers to a specific or identified procurement covering goods, infrastructure project or consulting services. A Procurement Project shall be described, detailed, and scheduled in the Project Procurement Management Plan prepared by the agency which shall be consolidated in the procuring entity's Annual Procurement Plan. (GPPB Circular No. 06-2019 dated 17 July 2019)

PSA – Philippine Statistics Authority.

SEC – Securities and Exchange Commission.

SLCC – Single Largest Completed Contract.

Supplier – refers to a citizen, or any corporate body or commercial company duly organized and registered under the laws where it is established, habitually established in business and engaged in the manufacture or sale of the merchandise or performance of the general services covered by his bid. (Item 3.8 of GPPB Resolution No. 13-2019, dated 23 May 2019). Supplier as used in these Bidding Documents may likewise refer to a distributor, manufacturer, contractor, or consultant.

UN – United Nations.

SECTION I. INVITATION TO BID

SECTION II. INSTRUCTION TO BIDDERS

1. Scope of Bid

The Procuring Entity, **Philippine Army** wishes to receive Bids for the ***PROCUREMENT OF CARTRIDGE, 81MM: ILLUM*** under **ORD PABAC2 005-23.**

The Procurement Project (referred to herein as "Project") is composed **of *one (1) lot***, the details of which are described in Section VII (Technical Specifications).

2. Funding Information

2.1. The GOP through the source of funding as indicated below for **CY 2023** in the amount of SIX *BILLION FIVE HUNDRED FORTY MILLION FOUR HUNDRED EIGHTY-ONE THOUSAND SEVEN HUNDRED SEVENTY-ONE AND 54/100 PESOS* ***(PhP6,540,481,771.54).***

2.2. The source of funding is **Fiscal Year 2023 General Appropriation Act.**

3. Bidding Requirements

The Bidding for the Project shall be governed by all the provisions of RA No. 9184 and its 2016 revised IRR, including its Generic Procurement Manuals and associated policies, rules and regulations as the primary source thereof, while the herein clauses shall serve as the secondary source thereof.

Any amendments made to the IRR and other GPPB issuances shall be applicable only to the ongoing posting, advertisement, or **IB** by the BAC through the issuance of a supplemental or bid bulletin.

The Bidder, by the act of submitting its Bid, shall be deemed to have verified and accepted the general requirements of this Project, including other factors that may affect the cost, duration and execution or implementation of the contract, project, or work and examine all instructions, forms, terms, and project requirements in the Bidding Documents.

4. Corrupt, Fraudulent, Collusive, and Coercive Practices

The Procuring Entity, as well as the Bidders and Suppliers, shall observe the highest standard of ethics during the procurement and execution of the contract. They or through an agent shall not engage in corrupt, fraudulent, collusive, coercive, and obstructive practices defined under Annex "I" of the 2016 revised IRR of RA No. 9184 or other integrity violations in competing for the Project.

5. Eligible Bidders

5.1. Only Bids of Bidders found to be legally, technically, and financially capable will be evaluated.

5.2. Foreign ownership exceeding those allowed under the rules may participate pursuant to:

i. When a Treaty or International or Executive Agreement as provided in Section 4 of the RA No. 9184 and its 2016 revised IRR allow foreign bidders to participate;
ii. Citizens, corporations, or associations of a country, included in the list issued by the GPPB, the laws or regulations of which grant reciprocal rights or privileges to citizens, corporations, or associations of the Philippines;
iii. When the Goods sought to be procured are not available from local suppliers; or
iv. When there is a need to prevent situations that defeat competition or restrain trade.

5.3. Pursuant to Section 23.4.1.3 of the 2016 revised IRR of RA No.9184, the Bidder shall have an SLCC that is at least one (1) contract similar to the Project the value of which, adjusted to current prices using the PSA's CPI, must be at least equivalent to:

a. For the procurement of Expendable Supplies: The Bidder must have completed a single contract that is similar to this Project, equivalent to **at least twenty-five percent (25%)** of the ABC.

b. For procurement where the Procuring Entity has determined, after the conduct of market research, that imposition of (a) will likely result to failure of bidding that will defeat the purpose of public bidding: The Bidder should comply with the following requirements:

i. Completed **at least two (2) similar contracts**, the aggregate amount of which should be equivalent to **at least twenty-five percent (25%)** in the case of expendable supplies of the ABC for this Project; and
ii. The largest of these similar contracts must be equivalent to **at least half of the percentage** of the ABC as required above.

5.4. The Bidders shall comply with the eligibility criteria under Section 23.4.1 of the 2016 IRR of RA No. 9184.

6. Origin of Goods

There is no restriction on the origin of goods other than those prohibited by a decision of the UN Security Council taken under Chapter VII of the Charter of the UN, subject to Domestic Preference requirements under **ITB** Clause 18.

7. Subcontracts

7.1. The Bidder may subcontract portions of the Project to the extent allowed by the Procuring Entity as stated herein, but in no case more than twenty percent (20%) of the Project.

However, the Procuring Entity has prescribed that **Subcontracting is not allowed.**

8. Pre-Bid Conference

The Procuring Entity will hold a pre-bid conference for this Project on the specified date and time and either at its physical address indicated herein and/or through videoconferencing/webcasting as indicated in paragraph 6 of the **IB.**

9. Clarification and Amendment of Bidding Documents

Prospective bidders may request for clarification on and/or interpretation of any part of the Bidding Documents. Such requests must be in writing and received by the Procuring Entity, either at its given address or through electronic mail indicated in the **IB**, at least ten (10) calendar days before the deadline set for the submission and receipt of Bids.

10. Documents comprising the Bid: Eligibility and Technical Components

10.1. The first envelope shall contain the eligibility and technical documents of the Bid as specified in **Section VIII (Checklist of Technical and Financial Documents)**.

10.2. The Bidder's SLCC as indicated in **ITB** Clause 5.3 should have been completed within the last five (5) years prior to the deadline for the submission and receipt of bids.

10.3. If the eligibility requirements or statements, the bids, and all other documents for submission to the BAC are in foreign language other than English, it must be accompanied by a translation in English, which shall be authenticated by the appropriate Philippine foreign service establishment, post, or the equivalent office having jurisdiction over the foreign bidder's affairs in the Philippines. Similar to the required authentication above, for Contracting Parties to the Apostille Convention, only the translated documents shall be authenticated through an Apostille pursuant to GPPB Resolution No. 13-2019 dated 23 May 2019. The English translation shall govern, for purposes of interpretation of the bid.

11. Documents comprising the Bid: Financial Component

11.1. The second bid envelope shall contain the financial documents for the Bid as specified in **Section VIII (Checklist of Technical and Financial Documents)**.

11.2. If the Bidder claims preference as a Domestic Bidder or Domestic Entity, a certification issued by DTI shall be provided by the Bidder in accordance with Section 43.1.3 of the 2016 revised IRR of RA No. 9184.

11.3. Any bid exceeding the ABC indicated in paragraph 1 of the **IB** shall not be accepted.

11.4. For Foreign-funded Procurement, a ceiling may be applied to bid prices provided the conditions are met under Section 31.2 of the 2016 revised IRR of RA No. 9184.

12. Bid Prices

12.1. Prices indicated on the Price Schedule shall be entered separately in the following manner:

a. For Goods offered from within the Procuring Entity's country:

i. The price of the Goods quoted EXW (ex-works, ex-factory, ex-warehouse, ex-showroom, or off-the-shelf, as applicable);
ii. The cost of all customs duties and sales and other taxes already paid or payable;
iii. The cost of transportation, insurance, and other costs incidental to delivery of the Goods to their final destination; and
iv. The price of other (incidental) services, if any, listed in e.

b. For Goods offered from abroad:

i. Unless otherwise stated in the **BDS**, the price of the Goods shall be quoted delivered duty paid (DDP) with the place of destination in the Philippines as specified in the **BDS**. In quoting the price, the Bidder shall be free to use transportation through carriers registered in any eligible country. Similarly, the Bidder may obtain insurance services from any eligible source country.
ii. The price of other (incidental) services, if any, as listed in **Section VII (Technical Specifications).**

13. Bid and Payment Currencies

13.1. For Goods that the Bidder will supply from outside the Philippines, the bid prices may be quoted in the local currency or tradable currency accepted by the BSP at the discretion of the Bidder. However, for purposes of bid evaluation, Bids denominated in foreign currencies, shall be converted to Philippine currency based on the exchange rate as published in the BSP reference rate bulletin on the day of the bid opening.

13.2. Payment of the contract price shall be made in **Philippine Pesos**.

14. Bid Security

14.1. The Bidder shall submit a Bid Securing Declaration or any form of Bid Security in the amount indicated in the **BDS**, which shall be not less than the percentage of the ABC in accordance with the schedule in the **BDS**.

14.2. The Bid and bid security shall be valid until **One Hundred Twenty (120) calendar days from the date of opening of bids**. Any Bid not accompanied by an acceptable bid security shall be rejected by the Procuring Entity as non-responsive.

15. Sealing and Marking of Bids

Each Bidder shall submit one copy of the first and second components of its Bid.

The Procuring Entity may request additional hard copies and/or electronic copies of the Bid. However, failure of the Bidders to comply with the said request shall not be a ground for disqualification.

If the Procuring Entity allows the submission of bids through online submission or any other electronic means, the Bidder shall submit an electronic copy of its Bid, which must be digitally signed. An electronic copy that cannot be opened or is corrupted shall be considered non-responsive and, thus, automatically disqualified.

16. Deadline for Submission of Bids

16.1. The Bidders shall submit on the specified date and time and either at its physical address or through online submission as indicated in paragraph 7 of the **IB.**

17. Opening and Preliminary Examination of Bids

17.1. The BAC shall open the Bids in public at the time, on the date, and at the place specified in paragraph 9 of the **IB**. The Bidders' representatives who are present shall sign a register evidencing their attendance. In case videoconferencing, webcasting or other similar technologies will be used, attendance of participants shall likewise be recorded by the BAC Secretariat.

In case the Bids cannot be opened as scheduled due to justifiable reasons, the rescheduling requirements under Section 29 of the 2016 revised IRR of RA No. 9184 shall prevail.

17.2. The preliminary examination of bids shall be governed by Section 30 of the 2016 revised IRR of RA No. 9184.

18. Domestic Preference

18.1. The Procuring Entity will grant a margin of preference for the purpose of comparison of Bids in accordance with Section 43.1.2 of the 2016 revised IRR of RA No. 9184.

19. Detailed Evaluation and Comparison of Bids

19.1. The Procuring BAC shall immediately conduct a detailed evaluation of all Bids rated "*passed*," using non-discretionary pass/fail criteria. The BAC shall consider the conditions in the evaluation of Bids under Section 32.2 of the 2016 revised IRR of RA No. 9184.

19.2. If the Project allows partial bids, bidders may submit a proposal on any of the lots or items, and evaluation will be undertaken on a per lot or item basis, as the case maybe. In this case, the Bid Security as required by **ITB** Clause 15 shall be submitted for each lot or item separately.

19.3. The descriptions of the lots or items shall be indicated in **Section VII (Technical Specifications)**, although the ABCs of these lots or items are indicated in the **BDS** for purposes of the NFCC computation pursuant to Section 23.4.2.6 of the 2016 revised IRR of RA No. 9184. The NFCC must be sufficient for the total of the ABCs for all the lots or items participated in by the prospective Bidder.

19.4. The Project shall be awarded as **one contract.**

19.5. Except for bidders submitting a committed Line of Credit from a Universal or Commercial Bank in lieu of its NFCC computation, all Bids must include the NFCC computation pursuant to Section 23.4.1.4 of the 2016 revised IRR of RA No. 9184, which must be sufficient for the total of the ABCs for all the lots or items participated in by the prospective Bidder. For bidders submitting the committed Line of Credit, it must be at least equal to ten percent (10%) of the ABCs for all the lots or items participated in by the prospective Bidder.

20. Post-Qualification

20.1. Within a non-extendible period of five (5) calendar days from receipt by the Bidder of the notice from the BAC that it submitted the Lowest Calculated Bid, the Bidder shall submit its latest income and business tax returns filed and paid through the BIR Electronic Filing and Payment System (eFPS) and other appropriate licenses and permits required by law and stated in the **BDS**.

21. Signing of the Contract

21.1. The documents required in Section 37.2 of the 2016 revised IRR of RA No. 9184 shall form part of the Contract. Additional Contract documents are indicated in the **BDS**.

Section III. Bid Data Sheet

<table>
<tr><th>ITB Clause</th><th></th></tr>
<tr><td>3</td><td>Non-compliance and/or non-conformance with the prescribed forms as provided in the Annexes of this Bidding Documents will be a ground for disqualification.</td></tr>
<tr><td>5.2</td><td>Foreign Bidders must be represented by a duly registered Philippine-based company.</td></tr>
<tr><td>5.3</td><td>For this purpose, contracts similar to the Project shall mean “Supply and Delivery of Mortar Ammunition” which must be completed within five (5) years prior to the deadline of the submission and receipt of bids.</td></tr>
<tr><td>6</td><td>All components of the goods to be supplied must come from one (1) source and manufacturer only.</td></tr>
<tr><td>7.1</td><td>Subcontracting is not allowed.</td></tr>
<tr><td>12</td><td>The price of the Goods shall be quoted Delivered at Place (DAP) to be delivered at Ammunition Company, Armament and Ammunition Battalion, Logistics Support Group, Army Support Command, Philippine Army, Camp Servillano Aquino, Tarlac City</td></tr>
<tr><td>13.1</td><td>Bid Price shall be quoted in Philippine Pesos.</td></tr>
<tr><td>14.1</td><td>The bid security shall be in the form of a Bid Securing Declaration, or any of the following forms and amounts:

a. The amount of not less than ONE MILLION EIGHTY THOUSAND PESOS (PhP1,080,000.00) which is equivalent to two percent (2%) of ABC, if bid security is in cash, cashier’s/manager’s check, bank draft/guarantee or irrevocable letter of credit; OR
b. The amount of not less than TWO MILLION SEVEN HUNDRED THOUSAND PESOS (PhP2,700,000.00) which is equivalent to five percent (5%) of ABC, if bid security is in Surety Bond.</td></tr>
<tr><td>15</td><td>Each Bidder shall submit One (1) original copy and two (2) photo copies of the first and second components of its bid. Each components of the bid must be sealed in two (2) separate envelopes duly labeled. Likewise, the two (2) separate envelopes shall be sealed in one (1) big envelope or carton box duly labeled.</td></tr>
<tr><td>19.3</td><td>The Project shall be awarded as one contract.
<table>
<tr><th>Lot</th><th>Description</th><th>Qty (rds)</th><th>ABC (Pesos)</th></tr>
<tr><td>1</td><td>Ctg, 81mm: Illum</td><td>3,000</td><td>54,000,000.00</td></tr>
</table></td></tr>
<tr><td>20.2</td><td>In accordance with Section 34.2 the 2016 Revised IRR of RA No 9184, the Bidder shall submit the following documents within a non-extendible period of five (5) calendar days from receipt of the notice from the BAC that it is the LCB/SCB

POST-QUALIFICATION REQUIREMENTS

<u>FOR LOCAL MANUFACTURER</u></td></tr>
</table>

	a. <u>Present Original Copy and submit photo copy:</u> a.1 **Valid and Current PHILGEPS** Certificate of Registration and Membership (Platinum Registration); a.2 **PO's or Contracts** for all Ongoing Contracts as listed per submitted Annex 1; a.3 **PO's or Contracts** relative to Single Largest Completed Contract per submitted Annex 2; a.4 **End-User's Acceptance**, **Official Receipt** (duplicate or triplicate copy) **or Sales Invoice** with Collection Receipt (duplicate or triplicate copy) relative to the Single Largest Completed Contract per submitted Annex 2; a.5 **Certificate of Notarial Commission or Appointment** of the Lawyer who notarized the submitted documents**;** a.6 **Indent License;** **b. <u>Present Original Copy and submit photo copy:</u>** b.1 **Latest income and business tax returns** manually filed Tax Returns or filed and paid through the BIR Electronic Filing and Payment System (eFPS). The latest income and business tax returns are those within the last six (6) months preceding the date of bid submission; b.2 **Registration Certificate** from the Securities and Exchange Commission (SEC), Department of Trade and Industry (DTI) for sole proprietorship, or CDA for cooperatives; b.3 **Mayor's/Business permit** issued by the local government where the principal place of business of the bidder is located; b.4 **Audited Financial Statements** showing, among others, the prospective bidder's total and current assets and liabilities stamped **"received"** if manually filed or **"attachment of system generated Transaction Reference Number and email to the system user"** if electronically filed issued by the Bureau of Internal Revenue or its duly accredited and authorized institutions, for the **preceding calendar year which should not be earlier than two (2) years from the date of bid submission**. **c. <u>Present Original Copy and submit photo copy:</u>** c.1. **Company Profile** (Organization, Affiliated Companies, Production Capability); c.2. **Vicinity map**/location of the business; c.3. Certificate of No Overdue Delivery and Bidder is not Blacklisted **issued by HAFPPS;** **Note 1:** In case of JV, each JV Partner must have Certification. **Note 2:** Over-due delivery shall mean undelivered or incomplete delivery of items after the due date of delivery or approved extension of delivery period. c.4 **Certificate of Employment** of company official/s designated in Indent License (License to Operate). ***<u>FOR FOREIGN MANUFACTURER THROUGH THE DULY REGISTERED PHILIPPINE-BASED COMPANY REPRESENTATIVE/S:</u>*** **1. Equivalent to the above-enumerated documents issued by country or place of business in English**. If not in English, it must be

	accompanied by a translation in English, which shall be authenticated by the appropriate Philippine foreign service establishment, post, or the equivalent office having jurisdiction over the foreign bidder's affairs in the Philippines. Similar to the required authentication above, for Contracting Parties to the Apostille Convention, only the translated documents shall be authenticated through an apostille pursuant to GPPB Resolution No. 13-2019 dated 23 May 2019. The English translation shall govern, for purposes of interpretation of the bid; AND ***(Present Original Copy and Submit Certified True Copy)*** 2. Philippine Representative Company's **Valid and Current Indent License to Deal** the goods to be bid for sale to the AFP of the Philippine Representative Company issued by the National Headquarters of PNP, Camp Crame, Quezon City. **AND** ***(Present & Submit Certified True Copy)*** 3. **Certificate of Employment** of company official/s designated in Indent License. ***In case of Joint Venture*** *(both local and foreign manufacturers), both partners must present/submit above documents.*

Section IV. General Conditions of Contract

1. Scope of Contract

This Contract shall include all such items, although not specifically mentioned, that can be reasonably inferred as being required for its completion as if such items were expressly mentioned herein. All the provisions of RA No. 9184 and its 2016 revised IRR, including the Generic Procurement Manual, and associated issuances, constitute the primary source for the terms and conditions of the Contract, and thus, applicable in contract implementation. Herein clauses shall serve as the secondary source for the terms and conditions of the Contract.

This is without prejudice to Sections 74.1 and 74.2 of the 2016 revised IRR of RA No. 9184 allowing the GPPB to amend the IRR, which shall be applied to all procurement activities, the advertisement, posting, or invitation of which were issued after the effectivity of the said amendment.

Additional requirements for the completion of this Contract shall be provided in the **Special Conditions of Contract** (**SCC).**

2. Advance Payment and Terms of Payment

2.1. Advance payment of the contract amount is provided under Annex “D” of the revised 2016 IRR of RA No. 9184.

2.2. The Procuring Entity is allowed to determine the terms of payment on the partial or staggered delivery of the Goods procured, provided such partial payment shall correspond to the value of the goods delivered and accepted in accordance with prevailing accounting and auditing rules and regulations. The terms of payment are indicated in the **SCC**.

3. Performance Security

Within ten (10) calendar days from receipt of the Notice of Award by the Bidder from the Procuring Entity but in no case later than prior to the signing of the Contract by both parties, the successful Bidder shall furnish the performance security in any of the forms prescribed in Section 39 of the 2016 revised IRR of RA No. 9184.

4. Inspection and Tests

The Procuring Entity or its representative shall have the right to inspect and/or to test the Goods to confirm their conformity to the Project specifications at no extra cost to the Procuring Entity in accordance with the Generic Procurement Manual. In addition to tests in the **SCC**, **Section IV (Technical Specifications)** shall specify what inspections and/or tests the Procuring

Entity requires, and where they are to be conducted. The Procuring Entity shall notify the Supplier in writing, in a timely manner, of the identity of any representatives retained for these purposes.

All reasonable facilities and assistance for the inspection and testing of Goods, including access to drawings and production data, shall be provided by the Supplier to the authorized inspectors at no charge to the Procuring Entity.

5. Warranty

5.1 In order to assure that manufacturing defects shall be corrected by the Supplier, a warranty shall be required from the Supplier as provided under Section 62.1 of the 2016 revised IRR of RA No. 9184.

5.2 The Procuring Entity shall promptly notify the Supplier in writing of any claims arising under this warranty. Upon receipt of such notice, the Supplier shall, repair or replace the defective Goods or parts thereof without cost to the Procuring Entity, pursuant to the Generic Procurement Manual.

6. Liability of the Supplier

The Supplier's liability under this Contract shall be as provided by the laws of the Republic of the Philippines.

SECTION V. SPECIAL CONDITIONS OF CONTRACT

SPECIAL CONDITIONS OF CONTRACT	
GCC Clause	
1	**Delivery and Documents –** For purposes of the Contract, "EXW," "FOB," "FCA," "CIF," "CIP," "DDP" and other trade terms used to describe the obligations of the parties shall have the meanings assigned to them by the current edition of INCOTERMS published by the International Chamber of Commerce, Paris. The Delivery terms of this Contract shall be as follows: ***For Goods Supplied from Abroad:*** The delivery terms applicable to the Contract are **Delivered At Place (DAP)** delivered at **Ammunition Company, Armament and Ammunition Battalion, Logistics Support Group, Army Support Command, Philippine Army, Camp Aquino, Tarlac City, Philippines**. In accordance with INCOTERMS." ***For Goods Supplied from Within the Philippines:*** The delivery terms applicable to this Contract are delivered at **Ammunition Company, Armament and Ammunition Battalion, Logistics Support Group, Army Support Command, Philippine Army, Camp Servillano Aquino, Tarlac City, Philippines**". Risk and title will pass from the Supplier to the Procuring Entity upon receipt and final acceptance of the Goods at their final destination." Delivery of the Goods shall be made by the Supplier in accordance with the terms specified in **Section VI. Schedule of Requirements**. **Deliveries for "safekeeping"** is not **allowed**. The details of shipping and/or other documents to be furnished by the Supplier are as follows: ***For Goods supplied from within the Philippines:*** Upon delivery of the Goods to the Project Site, the Supplier shall notify the Procuring Entity and present the following documents to the Procuring Entity: (i) Original and four copies delivery receipt/note, railway receipt, or truck receipt; (ii) Original Supplier's factory inspection report; (iii) Original and four copies of the Manufacturer's and/or Supplier's warranty certificate; (iv) Original and four copies of the certificate of origin (for imported Goods); (v) Delivery receipt detailing number and description of items received

signed by the authorized receiving personnel; and

(vi) Certificate of Acceptance/Inspection Report signed by the Procuring Entity's representative at the Project Site.

For Goods supplied from abroad:

Upon shipment, the Supplier shall notify the Procuring Entity and the insurance company by cable the full details of the shipment, including Contract Number, description of the Goods, quantity, vessel, bill of lading number and date, port of loading, date of shipment, port of discharge etc. Upon delivery to the Project Site, the Supplier shall notify the Procuring Entity and present the following documents as applicable with the documentary requirements of any letter of credit issued taking precedence:

(i) Original and four copies of the Supplier's invoice showing Goods' description, quantity, unit price, and total amount;
(ii) Original and four copies of the negotiable, clean shipped on-board bill of lading marked "freight pre-paid" and five copies of the non-negotiable bill of lading;
(iii) Original Supplier's factory inspection report;
(iv) Original and four copies of the Manufacturer's and/or Supplier's warranty certificate;
(v) Original and four copies of the certificate of origin (for imported Goods);
(vi) Delivery receipt detailing number and description of items received signed by the Procuring Entity's representative at the Project Site; and
(vii) Certificate of Acceptance/Inspection Report signed by the Procuring Entity's representative at the Project Site.

For purposes of this Clause the Procuring Entity's Representative at the Project Site is: PA TIAC, APAO, OG10*.*

Incidental Services –

The Supplier is required to provide all of the following services, including additional services, if any, specified in Section VI. Schedule of Requirements:

- furnishing of a detailed operations and maintenance manual for each appropriate unit of the supplied Goods;

- The Contract price for the Goods shall include the prices charged by the Supplier for incidental services and shall not exceed the prevailing rates charged to other parties by the Supplier for similar services.

Packaging – (Annex 4-C)

The Supplier shall provide such packaging of the Goods as is required to prevent their damage or deterioration during transit to their final destination, as indicated in this Contract. The packaging shall be sufficient to

	withstand, without limitation, rough handling during transit and exposure to extreme temperatures, salt and precipitation during transit, and open storage. Packaging case size and weights shall take into consideration, where appropriate, the remoteness of the GOODS' final destination and the absence of heavy handling facilities at all points in transit. The packaging, marking, and documentation within and outside the packages shall comply strictly with such special requirements as shall be expressly provided for in the Contract, including additional requirements, if any, specified below, and in any subsequent instructions ordered by the Procuring Entity. The outer packaging must be clearly marked on at least four (4) sides as follows: Name of the Procuring Entity Name of the Supplier Contract Description Final Destination Gross weight Any special lifting instructions Any special handling instructions Any relevant HAZCHEM classifications A packaging list identifying the contents and quantities of the package is to be placed on an accessible point of the outer packaging if practical. If not practical the packaging list is to be placed inside the outer packaging but outside the secondary packaging. The Supplier shall provide such packaging of the Goods as is required to prevent their damage or deterioration during transit to their final destination, as indicated in this Contract. The packaging shall be sufficient to withstand, without limitation, rough handling during transit and exposure to extreme temperatures, salt and precipitation during transit, and open storage. Packaging case size and weights shall take into consideration, where appropriate, the remoteness of the GOODS' final destination and the absence of heavy handling facilities at all points in transit. The packaging, marking, and documentation shall be in accordance with the manufacturer's standard. **Insurance –** The Goods supplied under this Contract shall be fully insured by the Supplier in a freely convertible currency against loss or damage incidental to manufacture or acquisition, transportation, storage, and delivery. The Goods remain at the risk and title of the Supplier until their final acceptance by the Procuring Entity. **Transportation –** Where the Supplier is required under Contract to deliver the Goods CIF, CIP or DDP, transport of the Goods to the port of destination or such other named place of destination in the Philippines, as shall be specified in this Contract, shall be arranged and paid for by the Supplier, and the cost

	thereof shall be included in the Contract Price. Where the Supplier is required under this Contract to transport the Goods to a specified place of destination within the Philippines, defined as the Project Site, transport to such place of destination in the Philippines, including insurance and storage, as shall be specified in this Contract, shall be arranged by the Supplier, and related costs shall be included in the Contract Price. Where the Supplier is required under Contract to deliver the Goods CIF, CIP or DDP, Goods are to be transported on carriers of Philippine registry. In the event that no carrier of Philippine registry is available, Goods may be shipped by a carrier which is not of Philippine registry provided that the Supplier obtains and presents to the Procuring Entity certification to this effect from the nearest Philippine consulate to the port of dispatch. In the event that carriers of Philippine registry are available, but their schedule delays the Supplier in its performance of this Contract the period from when the Goods were first ready for shipment and the actual date of shipment the period of delay will be considered *force majeure* in accordance with **GCC** Clause 22. The Procuring Entity accepts no liability for the damage of Goods during transit other than those prescribed by INCOTERMS for DDP Deliveries. In the case of Goods supplied from within the Philippines or supplied by domestic Suppliers risk and title will not be deemed to have passed to the Procuring Entity until their receipt and final acceptance at the final destination. **Patent Rights –** The Supplier shall identify the Procuring Entity against all third-party claims of infringement of patent, trademark, or industrial design rights arising from use of the Goods or any part thereof. For the given project in this Contract as awarded, all bid prices are considered fixed prices, and therefore not subject to price escalation during contract implementation, except under extraordinary circumstances and upon prior approval of the GPPB in accordance with Section 61 of R.A 9184 and its 2016 Revised IRR.
2.2	Payments shall be made only upon a certification by the **HoPE** to the effect that the Goods have been **rendered** or **delivered** in accordance with the prescribed delivery schedule of this Contract and have been duly **inspected** and **accepted**. **Payment shall be made by check for Local supplier/manufacturer or through Letter of Credit in case of foreign supplier/manufacturer.** In case payment shall be made by L/C, the PROCURING ENTITY shall open the irrevocable L/C in favor of the Supplier in accordance with the terms provided below in an Authorized Government Depository Bank after the approval of the Contract by the HOPE and cash transfer from the PA to

	the Authorized Government Depository Bank, to wit: (a) **Mode of Transmission**: Full cable telex/S.W.I.F. T; (b) **Advising and/or Confirmation**: L/C may be advised and/or confirmed by any bank to be identified by the Supplier, at the latter's sole expense; (c) **Payee Bank**: The L/C draft (if any) shall be drawn on the confirming bank; (d) **Beneficiary**: [Insert name and address of Supplier with Point of Contact; (e) **Currency and Amount of L/C**: L/C shall be in Philippine Peso, in an amount equivalent to the Total Contract Price. The **95%** of the amount of L/C shall be released upon completion of all the required documents enumerated in **SCC Clause 2.2(g)** of the bidding documents and the **5%** shall be released upon expiration of the warranty period provided in the bidding documents; (f) **Expiration Date**: **Two Hundred Seventy (270) calendar days** from issue date of the L/C; (g) **Payment Scheme Documentary Requirements**: Payment will be "**One Time Payment**" and shall be made to the Supplier at the time of the final acceptance of the GOODS by the PROCURING ENTITY in accordance with Section VI. Schedule of Requirements, and the submission or presentation of the following documents: **i.** Supplier's invoice showing GOODS' description, quantity, unit price, and total amount; **ii.** Negotiable, clean shipped on-board Bill of Lading marked "Freight Pre-Paid" and/or "Non-Negotiable Bill of Lading" or "Airway Bill"; **iii.** Original Supplier's factory inspection report or certificate of pre-delivery test and inspection report by PA TIAC (as applicable); **iv.** Manufacturer's and/or Supplier's warranty certificate; Original Manufacturers/Product Warranty/Guaranty Certificate/s issued in the name of the Philippine Army minimum of one (1) year from the date of final acceptance (full replacement for defective items); Warranty should indicate the Lot Number of the goods; **v.** Certificate of Origin (for imported GOODS); **vi.** Delivery Receipt detailing number and description of items received signed by the Procuring Entity's representative at the Delivery Site; **vii.** Certificate of Acceptance by the PA Technical Inspection and Acceptance Committee (PA TIAC); and **viii.** Original Manufacturers Certificate re: Date of Manufacture of the product should be not **more than one (1) year** from the date of delivery (brand new/freshly manufactured); (h) **Description of Goods:** As stated in the Technical Specifications with additional requirements as indicated in SECTION VI Schedule of Requirements. (i) **Delivery Period:** Complete Delivery within **Two Hundred Forty (240) calendar days** from receipt of the NTP by the supplier, which date shall not be later than seven (7) calendar days from the issuance of NTP: should the supplier fail to comply, the delivery

	period shall commence. (j) **<u>Shipment:</u>** One-time shipment; transshipment is acceptable**.** Negotiability: The L/C shall be irrevocable; (k) **<u>Liquidated Damages</u>**: Liquidated damages shall be imposed in accordance with Section 68 of Republic Act (RA) Nr 9184 and its Revised Implementing Rules and Regulations. (l) **<u>Other Instructions</u>:** i. The cost of the opening, as well as advising, confirmation, extension, and/or amendment, if any, of the L/C, and other bank charges shall be for the account of the Supplier; ii. The L/C must be in English; and iii. No boycott or restrictive language.
3	If the Performance Security is in the form of a Surety Bond, it must be in the name of the **Philippine Army/AFP** and its validity must be until the issuance by the **Procuring Entity of the Certificate of Final Acceptance**. The Surety Bond must be **duly notarized** and **signed by the supplier's authorized representative indicating therein his/her full name.**
4	The inspections and tests that will be conducted are: **A. POST-QUALIFICATION** involving documents validation and plant/office visit and inspection of sample goods shall be conducted by the Procuring Entity or its designated representatives (PQ Team designated by the BAC) to determine the compliance to the requirements of the end-user as required in the bidding documents. Manufacturer's plant inspection will be conducted, subject to the approval of the Head of the Procuring Entity (HOPE). The Manufacturer/Supplier shall be made to provide pieces of evidence of the compliance of items offered to the specifications as stated in Section VII of the bidding documents and his capability to manufacture/supply the goods/items being required. Expenses incurred related hereto particularly travel and board and lodging expenses shall be borne by the Procuring Entity. **<u>Moreover, the PQ Team will conduct validation to other government agencies if the supplier/manufacturer has no overdue delivery.</u>** **Note:** *Alternative Post-Qualification may be conducted in accordance with the HPA Letter Directive Nr 12 with Subject: Alternative Procedures for PQI and PDI during COVID-19 Pandemic dated 11 August 2020. This directive states that the physical visit of the inspectors at the manufacturer's site or place of business is no longer feasible due to the COVID-19 pandemic and the issued memorandum of the Department of National Defense. This directive prescribes that Post-qualification shall be conducted through Video Teleconference and other electronic means, adoption of previous PQ reports with Independent referencing and through the assistance of the Philippine Defense Armed Forces Attaché (PhilDAFA).* **B. PRE-DELIVERY INSPECTION AND TEST:** All items shall be subjected to Pre-Delivery Inspection (PDI) by the

	Philippine Army. **1. <u>For Foreign Manufacturers:</u>** **a.** All Items shall be subjected to pre-delivery inspection (PDI) and test by the Philippine Army representatives. The PDI shall be conducted not later than sixty (60) days prior to the expiry of the required delivery period at the goods' country of origin **OR** at Research and Development Center (RDC), ASCOM, PA **OR** as the PA TIAC may direct. **b.** The Inspection Team that may attend the pre-delivery test at the country of origin at supplier's expenses shall have a maximum of **five (5) members** from designated **PA TIAC** who have technical knowledge relevant to the item being procured. **c.** The Manufacturer shall ensure that the Inspection Team will be allowed to jointly participate in the conduct of the testing procedures. **d.** Supplier shall shoulder all the costs and expense of travel (via/IATA member airlines in case of international travel) and accommodation including Daily Subsistence Allowance (pursuant to Section 8, EO 298) and securing visas as necessary and travel insurance of all the Inspection Team Members. In this regard, supplier is required to **ISSUE the required written invitations** to the Inspection team through Philippine Army relative to the PDI within **seven (7) calendar days from receipt of NTP.** **e.** Supplier shall conduct product/inspection and pre-departure briefing to orient the members of the Inspection team at least one (1) week prior to departure date. Supplier shall ensure that a full time/on-board interpreter is available for non-English speaking country of manufacturer/plant site. Travel documents including insurance must be submitted to the inspection team during the pre-departure briefing. **f.** Failure to provide such invitation per paragraph *d* above may result in delays in release of required travel orders for the inspection team and may subject the supplier to applicable sanctions including liquidated damages due to late delivery. *The PDI shall be conducted in accordance with the prescribed PA Test and Acceptance Procedures or if "Manufacturer's Standard" is reflected as to the requirement in the PA TS/TAP, the Manufacturer's TS and TAP must be in accordance to NATO or equivalent standard.* ***Cost of testing including the cost of sample shall be for the account of the supplier. The samples shall be over and above the quantity to be delivered.*** **Note:** *Alternative Pre-Delivery Inspection (PDI) may be conducted in accordance with the HPA Letter Directive Nr 12 with Subject: Alternative Procedures for PQI and PDI during COVID-19 Pandemic dated 11 August*

2020. This directive states that the physical visit of the inspectors at the manufacturer's site or place of business is no longer feasible due to the COVID-19 pandemic and the issued memorandum of the Department of National Defense. This directive prescribes that PDI Team shall conduct the alternative PDI through VTC and/or submission of Video recordings provided that certified tests results from the supplier or a third-party entity shall be required to ensure transparency and through the utilization of Philippine Defense Armed Forces Attaché (PhilDAFA).

2. <u>For Local Manufacturers</u>:

a. Pre-delivery inspection of the items to be conducted by the designated **PA TIAC** who have technical knowledge relevant to the item being procured at Research and Development Center (RDC), ASCOM, PA; **OR** Government Arsenal Facilities; **OR** at the Local Manufacturer's facilities; **OR** at an authorized third-party testing facility **OR** as the PA TIAC may direct.

b. All incidental and related expenses relative to inspection shall be for the account of the manufacturer.

c. Acceptance Tests to be conducted as per prescribed Test and Acceptance Procedures **(Annex 4-C)**. **Cost of samples to be used for testing shall be for the account of the manufacturer. The samples shall be over and above the quantity to be delivered.**

SPECIFICATIONS:

Lot	Description	Technical Specifications	Test and Acceptance Procedure
1	Ctg, 81mm: Illum	TS NR: ORDA 18(IL-01)02-22 DTD 21 MAR 2022	TAP NR: ORDA 18(IL-01)02-22 DTD 21 MAR 2022

All items to be supplied must come from one (1) source and manufacturer only.

Date of Manufacture of Item: All items must have a manufacturing date which should not be more than **one (1) year** reckoned from the date of delivery **(brand new/freshly manufactured);**

C. Final Inspection and Acceptance will be at the Delivery Site. Completeness and appropriateness of the delivered goods shall be inspected by the Procuring Entity's representative at the delivery site at the soonest time possible. After completion of the inspection, the inspection team shall furnish the following reports:

1. Final Inspection and Acceptance Report by the TIAC;
2. OG10 Inspection Report;
3. SAO/APAO Acceptance Report;

<u>Correction of Defects:</u>

a. During Pre-Delivery Inspection. Any defects noted during pre-delivery inspection shall be corrected prior to shipment/delivery of the goods subject for another test and inspection.

	b. **During TIAC Inspection:** b.1. **For items delivered within the delivery period**, the Supplier shall be allowed to correct defects within 30 calendar days upon receipt of written Notice from the PAPC or within the remaining days of the delivery period, whichever comes later. (Note: This provision is not applicable to items delivered beyond the delivery period). b.2. **For items delivered after the lapse of the delivery period**, the Supplier shall be allowed to correct defects, subject to the imposition of liquidated damages.
	TIAC Non- Acceptance of Goods: In case items are rejected, the **PA TIAC** shall issue **Certificate of Non-Acceptance** on the cause of non-compliance of the goods. A corresponding **Notice of Non-Acceptance** shall then be issued by **Philippine Army Procurement Center (PAPC)** to the supplier. In case of rejection, the Supplier shall immediately withdraw the items from the Project/Delivery site. Any loss or damage thereto after such declaration shall be the sole responsibility of the Supplier.
	Supplier shall be **subjected to blacklisting** due to termination by default.
5.1	The warranty shall be covered by, either retention money in an amount equivalent to **five percent (5%)**, or a special bank guarantee equivalent to **five percent (5%)** of the Contract Price in favor of the Armed Forces of the Philippines. The warranty period shall be **one (1) year** after acceptance by the Procuring Entity of the Delivered Goods. The manufacturer shall issue a Warranty Certificate that shall cover a minimum of one (1) year after the acceptance by the Procuring Entity of the Delivered Goods. The Obligation for the warranty shall only be released after the lapse of the warranty period.
5.2	The period for repair or replacement for the defective goods or parts thereof shall be within Ninety (90) Calendar Days (maximum) upon receipt of the Notice of Defects. The PROCURING ENTITY through the TIAC may invoke for warranty claims for the GOODS or any part thereof that fail to conform to the specifications within the warranty period. The Supplier shall either rectify or replace such defective GOODS or parts thereof or make alterations necessary to meet the specifications at no cost to the PROCURING ENTITY, and shall inspect the rectified/replaced goods, at no cost to the PROCURING ENTITY, upon giving a notice pursuant to GCC Clause 5.2.
6	When the supplier fails to satisfactorily deliver the goods or services under the contract within the specified delivery schedule or project implementation schedule, inclusive of duly granted time extensions, if any,

	the supplier shall be liable for damages for the delay and shall pay the Procuring Entity liquidated damages, not by way of penalty, for every day of delay until such goods or services are finally delivered or performed and accepted by the Procuring Entity concerned. The amount of the liquidated damages shall be at least equal to one-tenth of one percent (0.001) of the cost of the unperformed portion for every day of delay. Once the cumulative amount of liquidated damages reaches ten percent (10%) of the amount of the contract, the Procuring Entity may rescind or terminate the contract, without prejudice to other courses of action and remedies available under the circumstances.

SECTION VI. SCHEDULE OF REQUIREMENTS

The delivery schedule expressed as calendar days stipulates hereafter a delivery date which is the date of delivery to the project site.

Lot	*Description*	*Qty*	*Unit*	*Delivery Period*
1	Cartridge, 81mm: Illum	3,000	round	**Two Hundred Forty (240) Calendar Days upon receipt of NTP** by the supplier, which date shall not be later than seven (7) calendar days from the issuance of NTP; should the supplier fail to comply, the delivery period shall commence.
	Cut away model of Cartridge, 81mm: Illum	5	each	
	Firing Table	1	each per Outer Packaging	
	Technical Data Sheet (placed inside the Outer Packaging)	1	each per Outer Packaging	

SECTION VII. TECHNICAL SPECIFICATIONS

HEADQUARTERS
PHILIPPINE ARMY
Fort Andres Bonifacio, Metro Manila

TS NR: ORDA18(IL-01)02-22

MAR 2 1 2022

TECHNICAL SPECIFICATIONS
Cartridge, 81mm: Illuminating

Description:	A mortar cartridge used for illuminating the battlefield or a desired area to provide good visual of any military subjects or reveal enemy location
Weapons Application:	Mortar, 81mm: M1; M29; M29A1; M252; Cardom System
Technical Data:	
1. Dimension and Weight:	
1.1. Round Weight	3.80 - 4.90kg
1.2. Length	550 – 650mm
1.3. Diameter	81mm
2. Type:	Illuminating
3. Filler:	Illuminating Pyrotechnical Composition or Flare with Parachute
4. Fuze:	Mechanical Time Super Quick or Powder Train Super Quick or Electronic Time
5. Body:	
5.1. Material	Aluminum Alloy or Forged Steel or Cast Iron
5.2. Color	White with Black Markings
6. Primer:	Percussion
7. Propelling Charge:	Manufacturer's Standard
8. Number of Charges:	P+4 (min)
9. Performance:	
9.1. Maximum Range	The range shall not be less than 3,000 meters
9.2. Chamber Pressure	Manufacturer's Standard
9.3. Muzzle Velocity	Manufacturer's Standard
9.4. Illumination (min)	
9.4.1. Burning Time	40 seconds (min)
9.4.2. Luminous Intensity	500,000 candela power (min)
9.5. Functional Test	The cartridge shall be free from functional defects as stated in the types and classification of defects when fired from standard weapons indicated in the weapons of application
10. Packaging:	
10.1. Inner	One (1) round per fiberboard container
10.2. Outer	Wooden Box (Termite Treated) or Plastic Box with Tamper Proof Seal
11. Markings:	
11.1. Body	a. Nomenclature **"Cartridge, 81mm: Illuminating"** or **"Ctg, 81mm: Illum"** b. Lot Number shall indicate the following: - Manufacturer's Code - Month of Production - Year of Production

By 2028, a world-class Army that is a source of national pride.
TECHNICAL SPECIFICATIONS for Cartridge, 81mm: Illuminating
TS NR: ORDA18(IL-01)02-22

	c. Name or Type of Filler
	d. Date of Manufacture
11.2. Inner Packaging	a. Nomenclature **"Cartridge, 81mm: Illuminating"** or **"Ctg, 81mm: Illum"**
	b. Lot Number shall indicate the following: - Manufacturer's Code - Month of Production - Year of Production
	c. Name or Type of Filler
11.3. Outer Packaging	a. Philippine Army
	b. PH Government Property
	c. Nomenclature **"Cartridge, 81mm: Illuminating"** or **"Ctg, 81mm: Illum"**
	d. Lot Number shall indicate the following: - Manufacturer's Code - Month of Production - Year of Production
	e. Manufacturer
	f. Quantity per Box
	g. Weight (N.E.W and Gross)
	h. Dimensions in metric units (Length x Width x Height)
	i. Hazard Classification Code
12. Other Requirements:	
12.1. Firing Table	Required for every outer packaging
12.2. Technical Data Sheet	

PREPARED BY:

DARREL P MARIANO
Major (OS) PA
Chief, PRB, OACOCS

ROXANNE R SANTOS
Major (OS) PA
Chief, FB, OACOCS

RECOMMENDED BY:

LEO EDWARD Y CARANTO
Colonel MNSA (OS) PA
ACOCS

APPROVED BY:

ROMEO S BRAWNER JR
Lieutenant General PA
Commanding General

Honor. Patriotism. Duty.

Page **2** of **2**

HEADQUARTERS
PHILIPPINE ARMY
OFFICE OF THE ARMY CHIEF ORDNANCE AND CHEMICAL SERVICE
Fort Andres Bonifacio, Metro Manila

TAP NR: ORDA18(IL-01)02-22

MAR 2 1 2022

TEST AND ACCEPTANCE PROCEDURES
Cartridge, 81mm: Illuminating

1. REFERENCES:

1.1. Technical Specifications for Ctg, 81mm: Illuminating dated _____.

1.2. Sampling Plans for the Test and Acceptance of Ammunition (For Hand/Rifle/Special Grenades; Mortar and Artillery Ammunition) dated 23 November 2018.

2. OBJECTIVES:

2.1. To determine the functional reliability of the ammunition.
2.2. To determine the stability of the ammunition when subjected to adverse field and storage conditions.
2.3. To determine user safety when ammunition is fired in various environmental conditions.
2.4. To ascertain compliance to standards and specifications.

3. GUIDELINES:

3.1. The manufacturer/supplier shall ensure that the complete quantity stated in the contract is packed/palletized prior to the inspection.
3.2. Technical inspection and test shall be conducted on the representative samples of the lot through visual/physical, weight and dimensional measurements to determine the over-all workmanship, markings, color and appropriate packaging of the items.
3.3. Functional Test will be done to determine the functional performance of the ammunition.
3.4. Results obtained shall be recorded and evaluated to determine the compliance of the items to technical specifications and as basis for acceptance or rejection of the lot or lots.

4. PROCEDURES:

4.1. COMPLETENESS INSPECTION AND RANDOM SAMPLING:

The Technical Inspection and Acceptance Committee (TIAC) for Ordnance-Firepower/ Pre-Delivery Inspection (PDI) Team shall check the completeness of the goods and conduct random sampling from the lot or lots. The samples shall be properly segregated, packed, marked and secured by the members. **(See Para 4.3 – Allocation of Representative Samples)**

4.2. TEST AND INSPECTION PARAMETERS:

4.2.1. VISUAL INSPECTION:

4.2.1.1. FOR THE PACKAGING:

4.2.1.1.1. Purpose: This non-destructive test shall be performed to determine the overall workmanship, conformity to technical specifications of the packaging and its markings to ensure that the inspected item shall be free from defects and meet the requirements of the Philippine Army.

4.2.1.1.2. Procedures:

4.2.1.1.2.1. Visually check the packaging.

4.2.1.1.2.2. Inspect the presence and appropriateness of the markings.

4.2.1.1.2.3. Inspect for signs of deterioration, condition of handles, loose, missing or incorrect positioned parts.

4.2.1.1.2.4. Check for the compliance of the packaging material using appropriate instruments that will precisely identify the composition of the materials.

4.2.1.1.2.5. Observations shall be recorded.

4.2.1.1.3. Standard: The packaging shall be free from defects as stated in the **Types and Classifications of Defects- Visual Inspection- Packaging.**

4.2.1.2. FOR THE CARTRIDGES:

4.2.1.2.1. Purpose: This non-destructive test shall be performed to determine the overall workmanship, conformity to technical specifications of the cartridges and to ensure that said items are in accordance with the requirements of the Philippine Army.

4.2.1.2.2. Procedures:

4.2.1.2.2.1. The sample round, its parts or components shall be visually inspected for its compliance to the technical data requirements.

4.2.1.2.2.2. Inspect for the presence and appropriateness of markings.

4.2.1.2.2.3. Each sample shall be examined for presence/ evidence of defect on workmanship.

4.2.1.2.2.4. Observations shall be recorded.

4.2.1.2.3. Standard: The cartridge shall be free from defects as stated in the **Types and Classifications of Defects- Visual Inspection- Ammunition.**

4.2.2. WEIGHT AND DIMENSIONAL INSPECTION:

4.2.2.1. Purpose: This test shall be performed to determine compliance of the cartridge to weight and dimensional requirements in the technical specifications and meet the requirements of the Philippine Army.

4.2.2.2. Procedures:

4.2.2.2.1. The sample round, its parts or components shall be measured by using a weighing scale, go and no-go gages, vernier caliper, micrometer caliper or other appropriate measuring instruments. **All measuring instruments shall be calibrated for a minimum of 1-year prior date of test.**

4.2.2.2.2. Weight and dimensions shall be recorded.

4.2.2.3. Standards:

4.2.2.3.1. Weight and length shall be according to specifications.

4.2.2.3.2. Lower and upper limits of the diameter shall be according to manufacturer's standard.

4.2.3. PERFORMANCE TESTS:

A series of tests shall be performed to ensure that the cartridge will efficiently function and perform accordingly based on the established standards and specifications when subjected to various methods of actuation simulating field usage and storage conditions.

4.2.3.1. MAXIMUM RANGE TEST:

4.2.3.1.1. Purpose: This test shall be performed to determine the conformity of the ammunition with the maximum range requirement in the technical specifications.

4.2.3.1.2. Procedures:

4.2.3.1.2.1. Impact area/ target shall be designated.

4.2.3.1.2.2. The sample cartridges shall be conditioned at 70ºF ± 2ºF for a minimum of two (2) hours.

4.2.3.1.2.3. Using a standard test weapon, the ammunition shall be fired at full charge.

4.2.3.1.2.4. Measure the range using a doppler radar or equivalent measuring instruments.

4.2.3.1.2.5. Observations shall be recorded.

4.2.3.1.2.6. This test may be carried out simultaneously with the chamber pressure, muzzle velocity, smoke screen duration and functional test.

4.2.3.1.3. Standards:

4.2.3.1.3.1. The maximum range of the cartridge shall be according to specifications.

4.2.3.1.3.2. The cartridge shall be free from defects as stated in the **Types and Classifications of Defects- Functional Test**

4.2.3.2. CHAMBER PRESSURE TEST:

4.2.3.2.1. Purpose: This test shall be performed to determine the conformity of the ammunition with the chamber pressure requirement in the technical specifications.

4.2.3.2.2. Procedures:

4.2.3.2.2.1. Impact area/ target shall be designated.

4.2.3.2.2.2. Sample cartridge s shall be conditioned at 70ºF ± 2ºF for at least two (2) hours.

4.2.3.2.2.3. Using a standard test weapon, the ammunition shall be fired at full charge.

4.2.3.2.2.4. Measure the chamber pressure during firing using any appropriate measuring instruments.

4.2.3.2.2.5. Observations shall be recorded.

4.2.3.2.2.6. This test may be carried out simultaneously with the maximum range, muzzle velocity, smoke screen duration and functional test.

4.2.3.2.3. Standards:

4.2.3.2.3.1. The chamber pressure of the cartridge shall be according to specifications.

4.2.3.2.3.2. The cartridge shall be free from defects as stated in the **Types and Classifications of Defects- Functional Test**.

4.2.3.3. MUZZLE VELOCITY TEST:

4.2.3.3.1. Purpose: This test shall be performed to determine the conformity of the ammunition with the muzzle velocity requirement in the technical specifications.

4.2.3.3.2. Procedures:

4.2.3.3.2.1. Impact area/ target shall be designated.

4.2.3.3.2.2. Sample cartridge s shall be conditioned at 70ºF ± 2ºF for at least two (2) hours.

4.2.3.3.2.3. Using a standard test weapon, the ammunition shall be fired at full charge.

4.2.3.3.2.4. Measure the velocity produced during firing using doppler radar or any appropriate measuring instruments.

4.2.3.3.2.5. Observations shall be recorded.

4.2.3.3.2.6. This test may be carried out simultaneously with the maximum range, chamber pressure, smoke screen duration and functional test.

4.2.3.3.3. Standards:

4.2.3.3.3.1. The muzzle velocity of the cartridge shall be according to specifications.

4.2.3.3.3.2. The cartridge shall be free from defects as stated in the **Types and Classifications of Defects- Functional Test**.

4.2.3.4. BURNING TIME TEST:

4.2.3.4.1. Purpose: This test shall be performed to determine the conformity of the ammunition with the smoke screen duration requirement in the technical specifications.

4.2.3.4.2. Procedures:

4.2.3.4.2.1. Impact area/ target shall be designated.

4.2.3.4.2.2. Sample cartridge s shall be conditioned at 70ºF ± 2ºF for at least two (2) hours.

4.2.3.4.2.3. Using a standard test weapon, the ammunition shall be fired.

4.2.3.4.2.4. Upon visibility of emission, measure the duration of smoke using a stopwatch or any appropriate instrument.

4.2.3.4.2.5. Observations shall be recorded.

4.2.3.4.2.6. This test may be carried out simultaneously with the maximum range, chamber pressure, muzzle velocity and functional test.

4.2.3.4.3. Standards:

4.2.3.4.3.1. Smoke screen duration of the cartridge shall be according to specifications.

4.2.3.4.3.2. The cartridge shall be free from defects as stated in the **Types and Classifications of Defects- Functional Test.**

4.2.3.5. FUNCTIONAL TEST:

4.2.3.5.1. Purpose: The tests shall be performed to ascertain the complete functional performance of the ammunition and ensure that there shall be no malfunction attributed to the ammunition.

4.2.3.5.2. Procedures:

4.2.3.5.2.1. Impact area/ target shall be designated.

4.2.3.5.2.2. Sample cartridge shall be conditioned at 70ºF ± 2ºF for at least two (2) hours.

4.2.3.5.2.3. Using a standard test weapon, the ammunition shall be fired per increment charge.

4.2.3.5.2.4. Observations shall be recorded.

4.2.3.5.2.5. This test may be carried out simultaneously with the maximum range, chamber pressure, muzzle velocity, burning time and smoke screen duration test.

4.2.3.5.3. Standard: The cartridge shall be free from defects as stated in the **Types and Classifications of Defects- Functional Test.**

4.2.3.6. LUMINOUS INTENSITY TEST:

4.2.3.6.1. Purpose: This test shall be performed to determine the conformance of the cartridge to the illumination requirement in the technical specifications.

4.2.3.6.2. Procedures:

4.2.3.6.2.1. Appropriate test area shall be designated.

4.2.3.6.2.2. Sample cartridge s shall be conditioned at 70ºF ± 2ºF for at least two (2) hours.

4.2.3.6.2.3. The ammunition shall be fired or actuated using applicable procedures.

4.2.3.6.2.4. Using appropriate instrument/s, measure the amount of illumination produced by the ammunition.

4.2.3.6.2.5. Observations shall be recorded.

4.2.3.6.3. Standard: Illumination produced by cartridge shall be according to specifications.

4.3. ALLOCATION AND CRITERIA OF REPRESENTATIVE SAMPLES: (Based on the attached Sampling Plans for Artillery Ammunition)

Table – 1

TYPE OF INSPECTION/ TEST	NR OF SAMPLES	CRITERIA
1. Visual Inspection: (Representative samples)		
1.1. For the Packaging	100% of the Quantity of samples indicated in Table 1 corresponding to the total number of packaging for lot size.	Sampling Plan for Test and Acceptance of Ammunition for Hand/Rifle/Special Grenades; Mortar; Artillery Ammunition. (Attached)
1.2. For the Cartridges	100% of the Quantity of samples indicated in Table 2 corresponding to the lot size.	Sampling Plan for Test and Acceptance of Ammunition for Hand/Rifle/Special Grenades; Mortar; Artillery Ammunition.
2. Weight and Dimensional Inspection: (Representative samples)		
2.1. Round Weight 2.2. Length 2.3. Diameter	100% of the quantity of samples indicated in Table 2 corresponding to the total number of lot size.	Sampling Plans for Test and Acceptance Procedure of Ammunition (For Hand/ Rifle/ Special Grenade; Mortar; Artillery Ammunition)
3. Performance Tests: (Samples to undergo the test shall be taken from the representative samples that passed the Visual, Weight and Dimensional Inspection)		
3.1. Luminous Intensity Test	1 round	Note
3.2. Maximum Range Test	100% of the quantity of samples indicated in Table 3 corresponding to the total number of lot size.	Sampling Plans for Test and Acceptance Procedure of Ammunition (For Hand/ Rifle/ Special Grenade; Mortar; Artillery Ammunition)
3.3. Chamber Pressure Test	100% of the quantity of samples indicated in Table 3 corresponding to the total number of lot size.	
3.4. Muzzle Velocity Test	100% of the quantity of samples indicated in Table 3 corresponding to the total number of lot size.	
3.5. Burning Time Test	100% of the quantity of samples indicated in Table 3 corresponding to the total number of lot size.	
3.6. Functional Test	100% of the quantity of samples indicated in Table 3 corresponding to the total number of lot size.	

Note - Failure of the cartridge to comply with the applicable standard shall be cause for rejection of the lot. If the cartridge fails in the first test, a second sample shall be tested. If the cartridge fails in the second sample, the lot shall be rejected.

5. TYPES AND CLASSIFICATIONS OF DEFECTS:

TABLE – 2

TYPES OF DEFECTS	CLASSIFICATION OF DEFECTS		
	CRIT	MAJ	MIN
1. Visual Inspection:			
1.1. For the Packaging:			
1.1.1. Material not according to specifications		X	
1.1.2. Number of cartridges per packaging requirement not according to specifications		X	
1.1.3. Damaged, missing and incorrectly positioned parts			X

1.1.4. Incorrect, missing or illegible markings			X
1.1.5. Evidence of poor workmanship (any visual defects not mentioned above)			X
1.2. For the Cartridge:			
1.2.1. Filler:			
1.2.1.1. Filler not according to specifications		X	
1.2.2. Fuze:			
1.2.2.1. Fuze safety wire missing or unsecured	X		
1.2.2.2. Fuze type is not according to specifications		X	
1.2.2.3. Fuze not fully seated			X
1.2.2.4. Fuze not set to SQ (if applicable)			X
1.2.3. Body and Stabilizing Fin Assembly:			
1.2.3.1. Obturating ring or gas check grooves missing	X		
1.2.3.2. Fin bladed damaged or distorted	X		
1.2.3.3. Obturating ring or gas check grooves damaged		X	
1.2.3.4. Damage, cracks or splits		X	
1.2.3.5. Body material not as specified		X	
1.2.3.6. Body color not as specified		X	
1.2.3.7. Markings not as specified, missing, incomplete or illegible		X	
1.2.3.8. Glue or asphalt on bourrelet area		X	
1.2.4. Propelling Charge:			
1.2.4.1. Increment charge damaged to the extent that propellant may leak	X		
1.2.4.2. Increment charge damaged but not to the extent that propellant may leak		X	
1.2.4.3. Charge type not as specified		X	
1.2.4.4. Charge provided missing or incomplete		X	
1.2.4.5. Missing or incomplete		X	
1.2.5. Primer/Igniter:			
1.2.5.1. Primer head above flush with rear surface of fin	X		
1.2.5.2. Ignition cartridge missing or inverted	X		
1.2.5.3. Primer/ignition charge not as specified		X	
1.2.6. Any component damaged or incorrectly assembled part other than mentioned above		X	
2. Weight and Dimensional Inspection:			
2.1. Round weight not within the specifications		X	
2.2. Length not within the specifications		X	
2.3. Lower and upper limits of diameter not within the manufacturer's standard		X	
3. Performance Test:			
3.1. Maximum Range not within the specifications		X	
3.2. Chamber Pressure not within the specifications		X	
3.3. Muzzle velocity not within the specifications		X	
3.4. Burning time not according to specifications		X	
4. Functional Test:			
4.1. Premature detonation	X		
4.2. Misfire	X		
4.3. Dud/Failure to function		X	
4.4. Other defects attributable to the cartridge		X	

6. ACCEPTANCE AND REJECTION:

Acceptability of lot/s shall be determined by using the Note/s under the Criteria and Allocation of Samples and Acceptance Quality Limit (AQL) indicated in the attached

Sampling Plan Tables for Visual Inspection, Weight and Dimensional Inspection, Performance Test, and Functional Test.

7. RESULT:

The result of the test based on the above criteria shall be the basis of the Philippine Army Technical Inspection and Acceptance Committee (PA-TIAC) for Ordnance-Firepower/Pre-Delivery Inspection (PDI) Team in the acceptance or rejection of the goods/items.

PREPARED BY:

DARREL P MARIANO
Major (OS) PA
Chief, PRB

ROXANNE R SANTOS
Major (OS) PA
Chief, FB

APPROVED BY:

LEO EDWARD Y CARANTO
Colonel MNSA (OS) PA
Chief

By 2028, a world-class Army that is a source of national pride.

SAMPLING PLAN FOR THE TEST AND ACCEPTANCE OF AMMUNITION
(For Hand/Rifle Special Grenades, Mortar Ammunitions, Artillery Ammunitions)

HEADQUARTERS
PHILIPPINE ARMY
OFFICE OF THE ARMY CHIEF ORDNANCE AND CHEMICAL SERVICE
Fort Andres Bonifacio, Metro Manila

NOV 2 3 2018

SAMPLING PLANS FOR THE TEST AND ACCEPTANCE OF AMMUNITION
(For Hand/Rifle/Special Grenades; Mortar Ammunition; Artillery Ammunition)

I. REFERENCES:

a. ANZI/ASQ Z1.4-2003: Sampling Procedures and Tables for Inspection by Attributes.

b. Military Standard 105E dtd 10 May 89, Subject: Sampling Procedures and Tables for Inspection by Attributes.

II. ACCEPTANCE AND REJECTION:

Acceptability of lot/s shall be determined by using the Acceptance Quality Limit (AQL) indicated in the following Sampling Plan Tables for Visual Inspection, Dimensional Inspection, Performance Test, and Functional Test.

If the number of defects found in the first sample is equal to or less than the first **Acceptance (Ac)** number, the lot or batch shall be accepted. If the number of defects found in the first sample is equal to or greater than the first **Rejection (Re)** number, the lot or batch shall be rejected.

If the number of defects found in the first sample is between the first **Acceptance (Ac)** and **Rejection (Re)** numbers, second samples shall be inspected. The number of defects found in the first and second samples shall be accumulated. If the cumulative number of defects is equal to or less than the second acceptance number, the lot or batch shall be accepted. If the cumulative number of defects is equal to or greater than the second rejection number, the lot or batch shall be rejected.

A. For Visual Inspection of Packaging: Double Sampling Plan for Normal Inspection of General Inspection Level II

Table 1

Lot Size	Sample Size Code	Sampling	Nr of Samples	Classification of Defects (AQL)			
				Major (6.5)		Minor (10.0)	
				Ac	Re	Ac	Re
2 - 8	A	1	2	0	1	0	2
		2	2	-	-	1	2

Honor. Patriotism. Duty.

By 2028, a world-class Army that is a source of national pride.

SAMPLING PLAN FOR THE TEST AND ACCEPTANCE OF AMMUNITION
(For Hand/Rifle/Special Grenades; Mortar Ammunitions; Artillery Ammunitions)

9 – 15	B	1	2	0	1	0	2
		2	2	-	-	1	2
16 - 25	C	1	3	0	2	0	2
		2	3	1	2	1	2
26 - 50	D	1	5	0	2	0	3
		2	5	1	2	3	4
51 - 90	E	1	8	0	3	1	4
		2	8	3	4	4	5
91 - 150	F	1	13	1	4	2	5
		2	13	4	5	6	7
151 - 280	G	1	20	2	5	3	7
		2	20	6	7	8	9
281 - 500	H	1	32	3	7	5	9
		2	32	8	9	12	13
501 – 1,200	J	1	50	5	9	7	11
		2	50	12	13	18	19
1,201 – 3,200	K	1	80	7	11	11	16
		2	80	18	19	26	27
3,201 – 10,000	L	1	125	11	16	11	16
		2	125	26	27	26	27
10,001 - 35000	M	1	200	11	16	11	16
		2	200	26	27	26	27
35,001 – 150,000	N	1	315	11	16	11	16
		2	315	26	27	26	27
150,001 – 500,000	P	1	500	11	16	11	16
		2	500	26	27	26	27
500,001 and over	Q	1	800	11	16	11	16
		2	800	26	27	26	27

B. For Visual and Dimensional Inspection of Ammunition: Double Sampling Plan for Normal Inspection of General Inspection Level II

Table 2

Lot Size	Sample Size Code	Sampling	Nr of Samples	Classification of Defects (AQL)					
				Critical (.04)		Major (2.5)		Minor (4.0)	
				Ac	Re	Ac	Re	Ac	Re
2 - 8	A	1	2	0	1	0	1	0	1
		2	-	-	-	-	-	-	-
9 - 15	B	1	2	0	1	0	1	0	1
		2	-	-	-	-	-	-	-
16 - 25	C	1	3	0	1	0	1	0	1
		2	-	-	-	-	-	-	-
26 - 50	D	1	5	0	1	0	1	1	2
		2	5	-	-	-	-	2	3

Honor. Patriotism. Duty.

Page 2 of 4

By 2028, a world-class Army that is a source of national pride.

SAMPLING PLAN FOR THE TEST AND ACCEPTANCE OF AMMUNITION
(For Hand/Rifle/Special Grenades; Mortar Ammunitions; Artillery Ammunitions)

51 - 90	E	1	8	0	1	0	2	0	2
		2	8	-	-	1	2	1	2
91 - 150	F	1	13	0	1	0	2	0	3
		2	13	-	-	1	2	3	4
151 - 280	G	1	20	0	1	0	3	1	4
		2	20	-	-	3	4	4	5
281 - 500	H	1	32	0	1	1	4	2	5
		2	32	-	-	4	5	6	7
501 – 1,200	J	1	50	0	1	2	5	3	7
		2	50	-	-	6	7	8	9
1,201 – 3,200	K	1	80	0	1	3	7	5	9
		2	80	-	-	8	9	12	13
3,201 – 10,000	L	1	125	0	1	5	9	7	11
		2	125	-	-	12	13	18	19
10,001 - 35000	M	1	200	0	1	7	11	11	16
		2	200	-	-	18	19	26	27
35,001 – 150,000	N	1	315	0	1	11	16	11	16
		2	315	-	-	26	27	26	27
150,001 – 500,000	P	1	500	0	2	11	16	11	16
		2	500	1	2	26	27	26	27
500,001 and over	Q	1	800	0	2	11	16	11	16
		2	800	1	2	26	27	26	27

C. For Performance and Functional Tests of Ammunition: Double Sampling Plan for Normal Inspection of Special Inspection Level S3

Table 3

Lot Size	Sample Size Code	Sampling	Nr of Samples	Classification of Defects (AQL)					
				Critical (.04)		Major (2.5)		Minor (4.0)	
				Ac	Re	Ac	Re	Ac	Re
2 - 15	A	1	2	0	1	0	1	0	1
		2	-	-	-	-	-	-	-
16 - 50	B	1	2	0	1	0	1	0	1
		2	-						
51 - 150	C	1	3	0	1	0	1	0	1
		2	-	-	-	-	-	-	-
151 -500	D	1	5	0	1	0	1	1	2
		2	5	-	-	-	-	2	3
501 – 3,200	E	1	8	0	1	0	2	0	2
		2	8	-	-	1	2	1	2
3,201 – 35,000	F	1	13	0	1	0	2	0	3
		2	13	-	-	1	2	3	4
35,001 – 500,000	G	1	20	0	1	0	3	1	4
		2	20	-	-	3	4	4	5

By 2028, a world-class Army that is a source of national pride.

SAMPLING PLAN FOR THE TEST AND ACCEPTANCE OF AMMUNITION
(For Hand/Rifle/Special Grenades; Mortar Ammunitions; Artillery Ammunitions)

500,001 and over	H	1	32	0	1	1	4	2	5
		2	32	-	-	4	5	6	7

III. RESULT:

The result of the test based on the above criteria shall be the basis of the Philippine Army Technical Inspection and Acceptance Committee (PA-TIAC) for Ordnance-Firepower/Pre-Delivery Inspection (PDI) Team in the acceptance or rejection of the goods/items.

PREPARED BY:

DARREL P MARIANO
Major, (OS) PA
Chief, PRB

APPROVED BY:

FLORANTE P SISON
Colonel, MNSA PA
Chief

Honor. Patriotism. Duty.

Page 4 of 4

By 2028, a world-class Army that is a source of national pride.

HEADQUARTERS
PHILIPPINE ARMY
OFFICE OF THE ARMY CHIEF ORDNANCE AND CHEMICAL SERVICE
Fort Andres Bonifacio, Metro Manila

SAMPLE DIAGRAM FOR MARKINGS ON PACKAGING OF AMMUNITION

INNER PACKAGING: (Sample Illustration, Diagram Not in Scale)

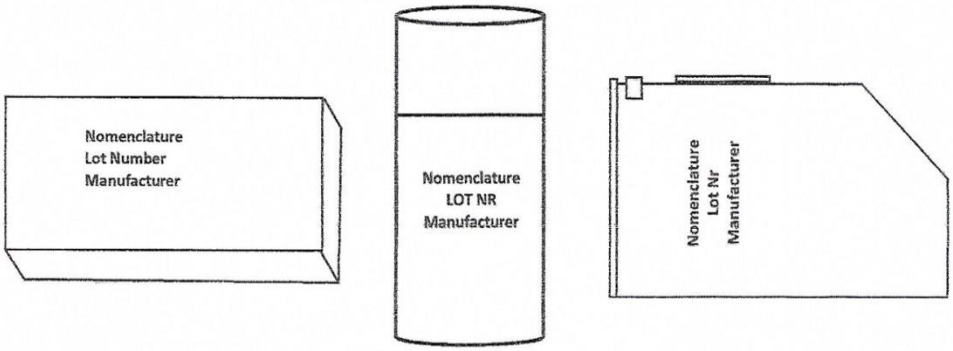

INTERMEDIATE PACKAGING: (Sample Illustration, Diagram Not in Scale)

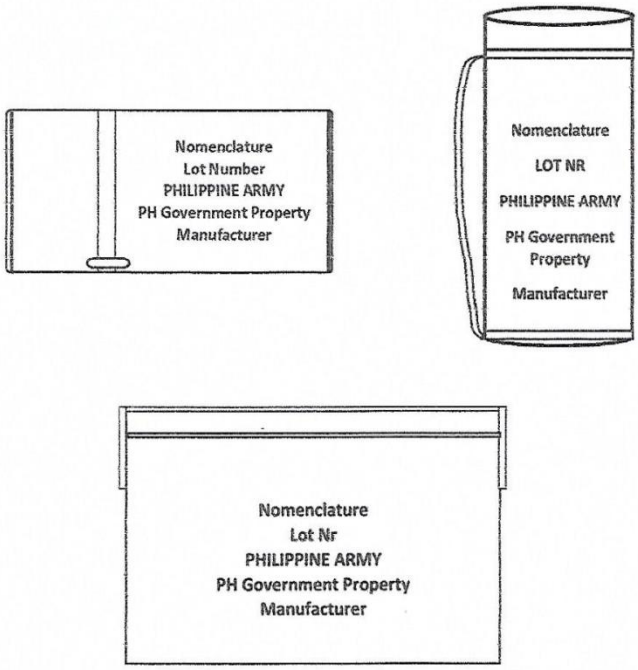

Honor. Patriotism. Duty.

By 2028, a world-class Army that is a source of national pride.

OUTER PACKAGING: (Sample Illustration, Diagram Not in Scale)

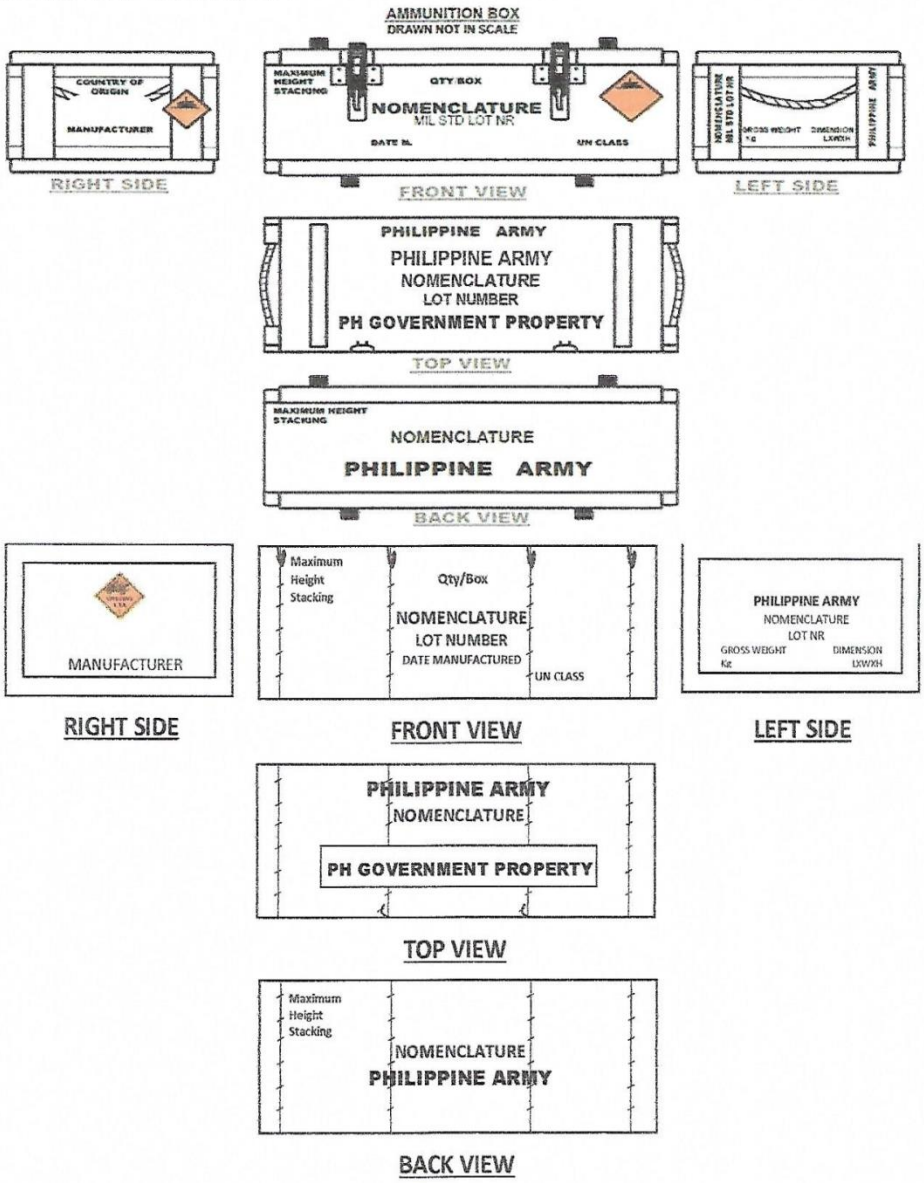

Note: The illustrated diagram is just an example purposely to serve as reference. Placement, font size, and font style are manufacturer's standard. Refer to Technical Specification for the minimum required markings.

PREPARED BY:	APPROVED BY:
DARREL P MARIANO MAJ (OS) PA Chief, PRB	FLORANTE P SISON Colonel, MNSA PA Chief

SECTION VIII. CHECKLIST OF TECHNICAL AND FINANCIAL DOCUMENTS

TAB	I. TECHNICAL COMPONENT ENVELOPE
	Class "A" Documents
Legal Documents:	
A	Valid PhilGEPS Registration Certificate (Platinum Membership) (all pages) in accordance with Section 8.5.2 of the IRR; **AND** **Note:** *Bidder must ensure that all class "A" eligibility Documents are valid and current at the time of submission of PhilGEPs Certificate of Registration and Membership (Platinum Registration). In case any of the submitted Eligibility Documents are not valid and current during the submission, opening and bid evaluation (SOBE) the bidder is required to submit the valid and current document/s or proof of application for renewal, such as official receipt.*
Technical Documents:	
B	Statement of the prospective bidder of all its ongoing government and private contracts, including contracts awarded but not yet started, if any, whether similar or not similar in nature and complexity to the contract to be bid **(Annex 1)**; **AND**
C	Statement of the bidder's Single Largest Completed Contract (SLCC) similar to the contract to be bid, except under conditions provided for in Sections 23.4.1.3 and 23.4.2.4 of the 2016 revised IRR of RA No. 9184, within the relevant period as provided in the Bidding Documents **(Annex 2) AND**
D	Original copy of Bid Security. If in the form of a Surety Bond, submit also a certification issued by the Insurance Commission; **OR** Original copy of Notarized Bid Securing Declaration **(Annex 3)**; **AND**
E	1. **Completed and signed Conformance/Statement of Compliance** to Technical Bid Form, Technical Specifications (TS) and other Test and Acceptance Procedure (TAP) (with corresponding Sampling Plans and AQL) and Sample Format of Technical Data Sheet; **(Annex 4) AND** **Annex 4-A** — Technical Bid Forms **Annex 4-B** — Technical Specifications **Annex 4-C** — Test and Acceptance Procedures (Packaging and Markings) with the Sampling Plan and AQL. **Annex 4-D** — Sample Format of Technical Data Sheet ***Note: If "Manufacturer's Standard" is reflected as to the***

	requirement in the TAP column, the Manufacturer's TAP must be attached under this TAB. 2. **Manufacturer's Certification of Conformance from its Technical Department or Production Department or Quality Assurance Department or its equivalent,** that the ammunition will be manufactured in accordance with the Philippine Army (PA) TS, TAP (with Sampling Plan & AQL), Packaging, and Markings. **(Annex 5) AND** 3. Conformity with the **Schedule of Requirements**. **(Annex 6)**; **AND**
F	Original duly signed Omnibus Sworn Statement (OSS); and if applicable, Original Notarized Secretary's Certificate in case of a corporation, partnership, or cooperative; or Original Special Power of Attorney of all members of the joint venture giving full power and authority to its officer to sign the OSS and do acts to represent the Bidder **(Annex 7)**; **AND**
G	Warranty Undertaking **(Annex 8)**; **AND**
H	**Proof of Authority** of the designated representative/s for purposes of the bidding; **and** **<u>For Local Manufacturer:</u>** a. **Duly notarized Special Power of Attorney –** For Sole Proprietorship if owner opts to designate a representative/s; **OR** b. **Duly notarized Secretary's Certificate** evidencing the authority of the designated representative/s, issued by the corporation, cooperative or the members of the joint venture. **<u>For Foreign Manufacturer:</u>** a. **Valid and Current Written Appointment** of the Philippine based company (as local representative of foreign manufacturer) issued by the foreign bidder. The written appointment must include detailed scope of responsibility of the local representative. A Certified True Copy of the Written Appointment may be submitted subject to the presentation of the original document during post qualification. b. **Duly Notarized authorization of the duly registered Philippine-based company representative** (e.g. Secretary's Certificate for Corporation, Special Power of Attorney for Sole Proprietor) with specimen signature of the authorized representative to transact with PA/AFP including address, telephone number, fax number and email address; ***Provided that in the case of unincorporated joint venture, each member shall submit a separate Special Power of Attorney and/or Secretary's Certificate evidencing the authority of the designated representatives for purposes of this bidding***. *(Note: **The Secretary's Certificate, Board Resolution or Special Power of Attorney, or its equivalent document**, must have a*

	specimen signature of the bidder or its authorized representative; it must indicate in the said document the authority to transact with the Philippine Army/AFP; and it must indicate in the same document the address, telephone number, mobile phone number, fax number and email address of the bidder or its authorized representative)
I	Copy of Letter Request address to Headquarters Armed Forces of the Philippines Procurement Service (HAFPPS) for the issuance of Certificate that the Bidder has **No overdue delivery** and is not **Blacklisted; AND** ***Notes:*** *1. The said letter must be* stamped or written "RECEIVED and DATE" by *HAFPPS.* *2. Duly registered Philippine-based company representative must also submit the abovementioned document.* *3. In case of JV, <u>each JV Partner</u> must submit the same copy of letter.* *4.* ***Certification will be submitted during PQ Inspection****.*
J	Colored Manufacturer's Brochure or Literature of the product being offered. Internet downloads may be included to supplement the information contained in the original brochures; **AND**
K	**Required Firearms and Ammunition License/s; and** **<u>For Local Manufacturer</u>**: Valid and current **License to Manufacture** the items to be bid issued by the National Headquarters of Philippine National Police (PNP) Camp Crame, Quezon City. **<u>For Foreign Manufacturer</u>**: Philippine Representative Company's Valid and Current **Indent License to Deal** the goods to be bid for sale to the AFP issued by the National Headquarters of Philippine National Police (PNP), Camp Crame, Quezon City. Note: Required license(s) presented during opening of bids shall be used for the importation of the item being bid.
Financial Documents:	
L	The prospective bidder's computation of Net Financial Contracting Capacity (NFCC) **(Annex 9)**; **OR** A committed Line of Credit **that must be at least equal to ten percent (10%) of the ABC of the project** issued from a Universal or Commercial Bank in lieu of its NFCC computation. **The amount of the committed Line of Credit MUST BE MACHINE VALIDATED. (Annex 10)**.
Class "B" Documents	
M	If applicable, a duly signed **Joint Venture Agreement (JVA)** in case the joint venture is already in existence; **OR** duly notarized statements from all the potential joint venture partners stating that they will enter into and abide by the provisions of the JVA

	in the instance that the bid is successful **(Annex 11-A)**. **OR** If Joint Venture is not applicable, the bidder must submit a duly signed statement stating that JVA is not applicable **(Annex 11-B)**.
Other documentary requirements under RA No. 9184 (as applicable)	
N	Certification from the DTI if the Bidder claims preference as a Domestic Bidder or Domestic Entity.

II. FINANCIAL COMPONENT ENVELOPE	
A	Original of duly signed and accomplished Bid Form **(Annex 12-A) and**
	Financial Bid Form **(Annex 12-B)**; **and**
B	Original of duly signed and accomplished Price Schedule(s) **(Annex 13)**.

ANNEXES

TECHNICAL DOCUMENTS	
Statement of the prospective bidder of all its ongoing government and private contracts	**Annex 1**
Statement of the bidder's Single Largest Completed Contract (SLCC) similar to the contract to be bid within five (5) years from the date of Submission and Receipt of Bids	**Annex 2**
Bid Securing Declaration	**Annex 3**
Statement of Compliance to Technical Specifications, Test and Acceptance, Sampling Plans, AQL, Packaging and Marking	**Annex 4**
Statement of Compliance to Technical Bid Form	**Annex 4-A**
Statement of Compliance to Technical Specifications	**Annex 4-B**
Statement of Compliance to Test and Acceptance Procedures, Sampling Plan, AQL, Packaging, and Markings	**Annex 4-C**
Conformity with the Sample Format of Technical Data Sheet	**Annex 4-D**
Manufacturer's Certification on Conformance to the TS, TAP, Sampling Plan, AQL, Packaging and Markings	**Annex 5**
Conformity with the Schedule of Requirements	**Annex 6**
Omnibus Sworn Statement (OSS)	**Annex 7**
Warranty Undertaking	**Annex 8**
Certificate of Net Financial Contracting Capacity (NFCC)	**Annex 9**
Sample Form for Committed Line of Credit	**Annex 10**
Protocol/Undertaking of Agreement to enter into Joint Venture	**Annex 11-A**
Sample Format of Statement of Inapplicability of Joint Venture Agreement	**Annex 11-B**
FINANCIAL DOCUMENTS	
Bid Form	**Annex 12-A**
Financial Bid Form	**Annex 12-B**
Bid Prices and applicable Price Schedules	**Annex 13**

Annex 1

Bidder's Company Letterhead

PROCUREMENT OF CARTRIDGE, 81MM: ILLUM
FOR THE PHILIPPINE ARMY

BID REF NO. ORD PABAC2 005-23

Pls. Check the Lot being bid.	Lot	Description	Qty (rds)	ABC (Pesos)
	1	Ctg, 81mm: Illum	3,000	54,000,000.00

STATEMENT OF ALL ONGOING GOVERNMENT AND PRIVATE CONTRACTS (INCLUDING CONTRACTS AWARDED BUT NOT YET STARTED)

Item Nr	Name of the Contract	Date of Contract	Contract Duration	Owner's/Buyer's Name & Address	Kinds of Goods	Amount of Contract and Value of Outstanding Contracts	Date of Delivery
TOTAL							

CERTIFIED CORRECT:

_____
Name and Signature of Authorized Representative

_____
Position

_____
Date

Annex 2

Bidder's Company Letterhead

PROCUREMENT OF CARTRIDGE, 81MM: ILLUM
FOR THE PHILIPPINE ARMY

BID REF NO. ORD PABAC2 005-23

Pls. Check the Lot being bid.	Lot	Description	Qty (rds)	ABC (Pesos)
	1	Ctg, 81mm: Illum	3,000	54,000,000.00

STATEMENT OF THE BIDDER'S SINGLE LARGEST COMPLETED CONTRACT (SLCC) SIMILAR TO THE CONTRACT TO BE BID WITHIN FIVE (5) YEARS FROM THE DATE OF SUBMISSION AND RECEIPT OF BIDS

a. For the procurement of Expendable Supplies: The Bidder must have completed a single contract that is similar to this Project, equivalent to at least twenty-five percent (25%) of the ABC.

b. For procurement where the Procuring Entity has determined, after the conduct of market research, that imposition of (a) will likely result to failure of bidding that will defeat the purpose of public bidding: The Bidder should comply with the following requirements:

i. Completed at least two (2) similar contracts, the aggregate amount of which should be equivalent to **at least twenty-five percent (25%)** in the case of expendable supplies of the ABC for this Project; **and**

ii. The largest of these similar contracts must be equivalent to **at least half of the percentage** of the ABC as required above.

Item Nr	Name of the Contract	Date of Contract	Contract Duration	Owner's / Buyer's Name & Address	Kinds of Goods	Amount of Completed Contract/s	Date of Delivery	OR Nr & Date, End-User's Acceptance Date or Sales "Invoice with Collection Receipt
TOTAL								

CERTIFIED CORRECT:

_____
Name and Signature of Authorized Representative

_____
Position

_____
Date

Annex 3

(PAGE 1 OF 2)

REPUBLIC OF THE PHILIPPINES)
CITY OF _____) S.S.

BID SECURING DECLARATION FORM

PROCUREMENT OF CARTRIDGE, 81MM: ILLUM FOR THE PHILIPPINE ARMY

BID REF NO. ORD PABAC2 005-23

Pls. Check the Lot being bid.	Lot	Description	Qty (rds)	ABC (Pesos)
	1	Ctg, 81mm: Illum	3,000	54,000,000.00

To: *[Insert name and address of the Procuring Entity]*

I/We[1], the undersigned, declare that:

1. I/We understand that, according to your conditions, bids must be supported by a Bid Security, which may be in the form of a Bid-Securing Declaration.

2. I/We accept that: (a) I/we will be automatically disqualified from bidding for any contract with any procuring entity for a period of two (2) years upon receipt of your Blacklisting order; and, (b) I/we will pay the applicable fine provided under Section 6 of the Guidelines on the Use of Bid Securing Declaration, within fifteen (15) days from receipt of the written demand by the procuring entity for the commission of acts resulting to the enforcement of the bid securing declaration under Sections 23.1(b), 34.2, 40.1 and 69.1, except 69.1(f), of the IRR of RA 9184; without prejudice to other legal action the government may undertake.

3. I/We understand that this Bid Securing Declaration shall cease to be valid on the following circumstances:

   (a) Upon expiration of the bid validity period, or any extension thereof pursuant to your request;
   (b) I am/we are declared ineligible or post-disqualified upon receipt of your notice to such effect, and (i) I/we failed to timely file a request for reconsideration or (ii) I/we filed a waiver to avail of said right;
   (c) I am/we are declared the bidder with the Lowest Calculated Responsive Bid, and I/we have furnished the performance security and signed the Contract.

IN WITNESS WHEREOF, I/We have hereunto set my/our hand/s this ____ day of *[month] [year]* at *[place of execution]*.

[Insert NAME OF BIDDER'S AUTHORIZED REPRESENTATIVE] [Insert Signatory's Legal Capacity]
Affiant

Annex 3
(PAGE 2 OF 2)

[1] *Select one and delete the other. Adopt the same instruction for similar terms throughout the document.*

SUBSCRIBED AND SWORN to before me this ___ day of *[month] [year]* at *[place of execution],* Philippines. Affiant/s is/are personally known to me and was/were identified by me through competent evidence of identity as defined in the 2004 Rules on Notarial Practice (A.M. No. 02-8-13-SC). Affiant/s exhibited to me his/her [insert type of government identification card used], with his/her photograph and signature appearing thereon, with no. _____ and his/her Community Tax Certificate No. _____ issued on ____ at _____.

Witness my hand and seal this ___ day of *[month] [year]*.

NAME OF NOTARY PUBLIC
Serial No. of Commission _____
Notary Public for _____ until _____
Roll of Attorneys No. _____
PTR No. _____ *[date issued], [place issued]*
IBP No. _____ *[date issued], [place issue]*

Doc No: _____
Page No: _____
Book No: _____
Series of: _____

Annex 4

STATEMENT OF COMPLIANCE TO TECHNICAL SPECIFICATIONS, TEST AND ACCEPTANCE, SAMPLING PLANS, AQL, PACKAGING AND MARKINGS

The bidder must state in the last column opposite each parameter and required specifications either “Comply” or “Not Comply”. All pages shall be properly signed. Bidders must state here either “Comply” or “Not Comply” against each of the individual parameters of each Specification stating the corresponding performance parameter of the equipment offered. Statements of “Comply” or “Not Comply” must be supported by evidence in a Bidders Bid and cross-reference to that evidence. Evidence shall be in the form of manufacturer’s un-amended sales literature, unconditional statements of specification and compliance issued by the manufacturer, samples, independent test data etc., as appropriate. A statement that is not supported by evidence or is subsequently found to be contradicted by the evidence presented will render the Bid under evaluation liable for rejection. A statement either in the Bidders statement of compliance or the supporting evidence that is found to be false either during Bid evaluation, post-qualification or the execution of the Contract may be regarded as fraudulent and render the Bidder or supplier liable for prosecution subject to the provisions of ITB Clause above goods manufactured by us.

CLARIFICATION AND SETTLEMENT OF CONFLICTING INTERPRETATION OF THE TECHNICAL SPECIFICATIONS

All clarifications regarding the technical specifications stipulated in this section will be clarified by the members of the Technical Working Group. In cases of conflicting interpretations, the nature and purpose of the equipment will be the basis of interpretation. The main basis for technical specifications and requirements is the nature and purpose of the equipment and its intended use as determined by the doctrinal application of the end-users represented herein by the Technical Working Group.

_____
Name of Company (in print)

_____
Signature of Company Authorized Representative

_____
Name and Designation

_____
Date

Annex 4-A
(Page 1 of 6)

TECHNICAL BID FORM

PROCUREMENT OF CARTRIDGE, 81MM: ILLUM FOR THE PHILIPPINE ARMY

BID REF NO. ORD PABAC2 005-23

TO THE BIDDER: Indicate "COMPLY" if Bidder's Statement of Compliance meets the Technical Specifications (TS), Test Procedures and Acceptance (TAP) and other Project Requirements. DO NOT LEAVE ANY BLANK. A "YES" OR "NO" ENTRY WILL NOT BE ACCEPTED. FAILURE TO CONFORM WILL RESULT IN A RATING OF **"FAILED".**

<table>
<tr><th>Line No.</th><th>Technical Specifications</th><th>Bidder's Statement of Compliance</th></tr>
<tr><td>1</td><td>
<table>
<tr><th>Lot</th><th>Description</th><th>Technical Specifications</th><th>Test and Acceptance Procedure</th><th>Pls. Check the Lot being bid.</th></tr>
<tr><td>1</td><td>Ctg, 81mm: Illum</td><td>TS NR: ORDA 18(IL-01)02-22 DTD 21 MAR 2022</td><td>TAP NR: ORDA 18(IL-01)02-22 DTD 21 MAR 2022</td><td></td></tr>
</table>
</td><td></td></tr>
<tr><td>2</td><td>Manufacturing Date: Manufacturing date should be not more than one (1) year from the date of delivery.</td><td></td></tr>
<tr><td>3</td><td>We will provide one (1) Firing Table per outer packaging of the ammunition</td><td></td></tr>
<tr><td>4</td><td>We will provide one (1) Technical Data Sheet per outer packaging of the ammunition in accordance with the sample format provided.</td><td></td></tr>
<tr><td>5</td><td>We have no overdue deliveries or unperformed services intended for Philippine Army (PA).</td><td></td></tr>
</table>

BIDDER'S UNDERTAKING

I/WE, the undersigned bidder, having examined the Bidding Documents including Bid Bulletins, as applicable, hereby OFFER to (supply/deliver/perform) the above described items.

I/WE undertake, if our bid is accepted, to deliver the items in accordance with the terms and conditions contained in the bid documents, including the posting if the required performance security within ten (10) calendar days from receipt of the Notice of Award. Until a formal contract is prepared and signed, thus bid is binding on us.

_____
Name of Company (in print)

_____
Signature of Company Authorized Representative

_____
Name and Designation

_____
Date

Annex 4-A
(Page 2 of 6)

TECHNICAL BID FORM

PROCUREMENT OF CARTRIDGE, 81MM: ILLUM FOR THE PHILIPPINE ARMY

BID REF NO. ORD PABAC2 005-23

TO THE BIDDER: Indicate "COMPLY" if Bidder's Statement of Compliance meets the Technical Specifications (TS), Test Procedures and Acceptance (TAP) and other Project Requirements. DO NOT LEAVE ANY BLANK. A "YES" OR "NO" ENTRY WILL NOT BE ACCEPTED. FAILURE TO CONFORM WILL RESULT IN A RATING OF **"FAILED".**

Line No.	Additional Requirements to be provided by the Bidder, If awarded the contract	Bidder's Statement of Compliance
6	**DELIVERY:** **a. Delivery Period: 240 calendar days** after Receipt of Notice to Proceed by the supplier, which date shall not be later than seven (7) calendar days from the issuance of NTP: should the supplier fail to comply, the delivery period shall commence. **b. Delivery Place:** Ammunition Company, AABn, LSG, ASCOM, PA, Camp Servillano Aquino, San Miguel, Tarlac City **c**. Delivery must be done in the presence of Philippine Army authorized representatives. **d.** The supplier must inform the PAPC at least seven (7) calendar days prior to delivery in delivery place/site. Failure to give due notice shall be a ground for non-acceptance of delivery. **e.** Deliveries made for **"safekeeping"** purposes is **NOT ALLOWED**. **f.** Other than the delivery schedule stated above, **NO PARTIAL DELIVERIES** are allowed. **g.** During delivery, the Supplier shall be responsible in unloading the items from the container to the designated warehouse of the PA. All costs related to porter services, handling and other related expenses shall be borne by the Supplier. In the absence of material handling equipment at the site, the Supplier shall provide the necessary equipment such as but not limited to: forklifts, hand pallet truck, etc. At the expense of the Supplier.	

BIDDER'S UNDERTAKING

I/WE, the undersigned bidder, having examined the Bidding Documents including Bid Bulletins, as applicable, hereby OFFER to (supply/deliver/perform) the above described items.

I/WE undertake, if our bid is accepted, to deliver the items in accordance with the terms and conditions contained in the bid documents, including the posting if the required performance security within ten (10) calendar days from receipt of the Notice of Award.
Until a formal contract is prepared and signed, thus bid is binding on us.

_____
Name of Company (in print)

_____
Signature of Company Authorized Representative

_____
Name and Designation

_____
Date

Annex 4-A
(Page 3 of 6)

TECHNICAL BID FORM

PROCUREMENT OF CARTRIDGE, 81MM: ILLUM FOR THE PHILIPPINE ARMY

BID REF NO. ORD PABAC2 005-23

TO THE BIDDER: Indicate "COMPLY" if Bidder's Statement of Compliance meets the Technical Specifications (TS), Test Procedures and Acceptance (TAP) and other Project Requirements. DO NOT LEAVE ANY BLANK. A "YES" OR "NO" ENTRY WILL NOT BE ACCEPTED. FAILURE TO CONFORM WILL RESULT IN A RATING OF **"FAILED".**

Line No.	Additional Requirements to be provided by the Bidder, If awarded the contract	Bidder's Statement of Compliance
7	**Issuance of End-User Certificate:** Pursuant to D4 CMILD-001-2017 dated Jan 26, 2017 issued by the Office of the Deputy Chief of Staff for Logistics, J4, the deadline for submission of End-user Certificate (EUC) requirements shall be within seven (7) Calendar Days upon receipt of Contract/Notice to Proceed (NTP). The letter request shall include as an attachment important documents necessary for the issuance thereof, such as specific template/format required by the foreign government and not by the foreign supplier. Failure on the part of the supplier to submit said requirements within the specified period shall not be used and acknowledge as a valid excuse or justification to warrant the extension of the contract.	
8	Warranty Period: **One (1) year** after final acceptance which includes full replacement of defective items free of charge.	
9	Any defects noted during pre-delivery inspection will be corrected prior to shipment/delivery of the goods subject for another test and inspection	
10	b. During TIAC Inspection: b.1. For items delivered within the delivery period, we will correct defects within 30 calendar days upon receipt of written Notice from the PAPC or within the remaining days of the delivery period, whichever comes later. (Note: This provision is not applicable to items delivered beyond the delivery period). b.2. For items delivered after the lapse of the delivery period, we will correct defects, subject to the imposition of liquidated damages.	
11	In case of rejection, we shall immediately withdraw the items from the Project/Delivery site. Any loss or damage thereto after such declaration shall be the our sole responsibility.	
12	The period for repair or replacement for the defective goods or parts thereof in the warranty period shall be within Ninety (90) Calendar Days (maximum) upon receipt of the Notice of Defects.	

BIDDER'S UNDERTAKING

I/WE, the undersigned bidder, having examined the Bidding Documents including Bid Bulletins, as applicable, hereby OFFER to (supply/deliver/perform) the above described items.

I/WE undertake, if our bid is accepted, to deliver the items in accordance with the terms and conditions contained in the bid documents, including the posting if the required performance security within ten (10) calendar days from receipt of the Notice of Award.
Until a formal contract is prepared and signed, thus bid is binding on us.

_____
Name of Company (in print)

_____
Signature of Company Authorized Representative

_____
Name and Designation

_____

Date

Annex 4-A
(Page 4 of 6)

TECHNICAL BID FORM

PROCUREMENT OF CARTRIDGE, 81MM: ILLUM FOR THE PHILIPPINE ARMY

BID REF NO. ORD PABAC2 005-23

TO THE BIDDER: Indicate "COMPLY" if Bidder's Statement of Compliance meets the Technical Specifications (TS), Test Procedures and Acceptance (TAP) and other Project Requirements. DO NOT LEAVE ANY BLANK. A "YES" OR "NO" ENTRY WILL NOT BE ACCEPTED. FAILURE TO CONFORM WILL RESULT IN A RATING OF **"FAILED".**

Line No.	Additional Requirements to be provided by the Bidder, If awarded the contract	Bidder's Statement of Compliance
13	**PRE-DELIVERY INSPECTION TEST:** All items shall be subjected to Pre-Delivery Inspection (PDI) by the Philippine Army. **FOR FOREIGN MANUFACTURERS:** A. All Items shall be subjected to pre-delivery inspection (PDI) and test by the Philippine Army representatives. The PDI shall be conducted not later than sixty (60) days prior to the expiry of the required delivery period at the goods' country of origin OR at Research and Development Center (RDC), ASCOM, PA OR as the PA TIAC may direct. B. The Inspection Team that may attend the pre-delivery test at the country of origin at supplier's expenses shall be composed of at least five (5) members from designated PA TIAC who have technical knowledge relevant to the item being procured C. In no case shall the Supplier be relieved from responsibility relative to the delivery of the goods in the event that the PDI is delayed for any reason including issues related to travel documents (i.e. Visa, Travel authority). Appropriate penalties for the delay shall be imposed as applicable. D. The manufacturer shall ensure that the inspection Team will be allowed to jointly participate in the conduct of the testing procedures at the option of the inspection team.	

BIDDER'S UNDERTAKING

I/WE, the undersigned bidder, having examined the Bidding Documents including Bid Bulletins, as applicable, hereby OFFER to (supply/deliver/perform) the above described items.

I/WE undertake, if our bid is accepted, to deliver the items in accordance with the terms and conditions contained in the bid documents, including the posting if the required performance security within ten (10) calendar days from receipt of the Notice of Award.
Until a formal contract is prepared and signed, thus bid is binding on us.

_____
Name of Company (in print)

_____
Signature of Company Authorized Representative

_____
Name and Designation

_____
Date

Annex 4-A
(Page 5 of 6)

TECHNICAL BID FORM

PROCUREMENT OF CARTRIDGE, 81MM: ILLUM FOR THE PHILIPPINE ARMY

BID REF NO. ORD PABAC2 005-23

TO THE BIDDER: Indicate "COMPLY" if Bidder's Statement of Compliance meets the Technical Specifications (TS), Test Procedures and Acceptance (TAP) and other Project Requirements. DO NOT LEAVE ANY BLANK. A "YES" OR "NO" ENTRY WILL NOT BE ACCEPTED. FAILURE TO CONFORM WILL RESULT IN A RATING OF **"FAILED".**

Line No.	Additional Requirements to be provided by the Bidder, If awarded the contract	Bidder's Statement of Compliance
14	*Continuation:* **PRE-DELIVERY INSPECTION TEST:** E. Supplier shall shoulder all the costs and expense of travel (via/IATA member airlines in case of international travel) and accommodation including Daily Subsistence Allowance (pursuant to Section 8, EO 298) and securing visas as necessary and travel insurance of all the Inspection Team Members. In this regard, supplier is required to ISSUE the required written invitations to the Inspection team through Philippine Army relative to the PDI at least seven (7) calendar days from receipt of NTP. F. Supplier shall conduct product/inspection and pre-departure briefing to orient the members of the Inspection team at least one (1) week prior to departure date. Supplier shall ensure that a full time/on-board interpreter is available for non-English speaking country of manufacturer/plant site. Travel documents including insurance must be submitted to the inspection team during the pre-departure briefing. G. Failure to provide such invitation per C above will result in delays in release of required travel orders for the inspection team which shall be the sole responsibility of the supplier and will subject the supplier to applicable sanctions including liquidated damages due to late delivery. Results of the Pre -Shipment Testing Procedures duly signed by Inspection Team in attendance to be submitted for payment purposes. However, final acceptance as to Physical count will be conducted in the Philippines. The PDI shall be conducted in accordance with the prescribed Test and Acceptance Procedures **(Annex 4- C).** Cost of testing including the cost of sample rounds shall be for the account of supplier. The samples rounds shall be over and above the quantity to be delivered.	

BIDDER'S UNDERTAKING

I/WE, the undersigned bidder, having examined the Bidding Documents including Bid Bulletins, as applicable, hereby OFFER to (supply/deliver/perform) the above described items.

I/WE undertake, if our bid is accepted, to deliver the items in accordance with the terms and conditions contained in the bid documents, including the posting if the required performance security within ten (10) calendar days from receipt of the Notice of Award.
Until a formal contract is prepared and signed, thus bid is binding on us.

_____
Name of Company (in print)

_____
Signature of Company Authorized Representative

_____
Name and Designation

_____
Date

Annex 4-A
(Page 6 of 6)

TECHNICAL BID FORM

PROCUREMENT OF CARTRIDGE, 81MM: ILLUM FOR THE PHILIPPINE ARMY

BID REF NO. ORD PABAC2 005-23

TO THE BIDDER: Indicate "COMPLY" if Bidder's Statement of Compliance meets the Technical Specifications (TS), Test Procedures and Acceptance (TAP) and other Project Requirements. DO NOT LEAVE ANY BLANK. A "YES" OR "NO" ENTRY WILL NOT BE ACCEPTED. FAILURE TO CONFORM WILL RESULT IN A RATING OF **"FAILED".**

Line No.	Additional Requirements to be provided by the Bidder, If awarded the contract	Bidder's Statement of Compliance
15	*Continuation:* **PRE-DELIVERY INSPECTION TEST:** **Note:** Alternative Pre-Delivery Inspection (PDI) may be conducted in accordance with the HPA Letter Directive Nr 12 with Subject: Alternative Procedures for PQI and PDI during COVID-19 Pandemic dated 11 August 2020. This directive states that the physical visit of the inspectors at the manufacturer's site or place of business is no longer feasible due to the COVID-19 pandemic and the issued memorandum of the Department of National Defense. This directive prescribes that PDI Team shall conduct the alternative PDI through VTC and/or submission of Video recordings provided that certified tests results from the supplier or a third-party entity shall be required to ensure transparency and through the utilization of Philippine Defense Armed Forces Attaché (PhilDAFA). **FOR LOCAL MANUFACTURERS:** A. Pre-delivery inspection of the items to be conducted by the designated PA TIAC who have technical knowledge relevant to the item being procured at Research and Development Center (RDC), ASCOM, PA; OR Government Arsenal Facilities; OR at the Local Manufacturer's facilities; OR at an authorized third-party testing facility OR as the PA TIAC may direct. B. All expenses relative to inspection shall be for the account of the manufacturer. C. Acceptance Tests to be conducted as per prescribed Test and Acceptance Procedures **(Annex 4-C)**. Cost of samples rounds to be used for testing shall be for the account of the manufacturer. The samples rounds shall be over and above the quantity to be delivered.	

BIDDER'S UNDERTAKING

I/WE, the undersigned bidder, having examined the Bidding Documents including Bid Bulletins, as applicable, hereby OFFER to (supply/deliver/perform) the above described items.

I/WE undertake, if our bid is accepted, to deliver the items in accordance with the terms and conditions contained in the bid documents, including the posting if the required performance security within ten (10) calendar days from receipt of the Notice of Award.
Until a formal contract is prepared and signed, thus bid is binding on us.

_____
Name of Company (in print)

_____
Signature of Company Authorized Representative

_____

Name and Designation

Date

Annex 4-B
(Page 1 of 2)

By 2028, a world-class Army that is a source of national pride.
TECHNICAL SPECIFICATIONS for Cartridge, 81mm: Illuminating
TS NR: ORDA18(IL-01)02-22

HEADQUARTERS
PHILIPPINE ARMY
Fort Andres Bonifacio, Metro Manila

TS NR: ORDA18(IL-01)02-22

MAR 2 1 2022

TECHNICAL SPECIFICATIONS
Cartridge, 81mm: Illuminating

Description:	A mortar cartridge used for illuminating the battlefield or a desired area to provide good visual of any military subjects or reveal enemy location
Weapons Application:	Mortar, 81mm: M1; M29; M29A1; M252; Cardom System
Technical Data:	
1. Dimension and Weight:	
1.1. Round Weight	3.80 - 4.90kg
1.2. Length	550 – 650mm
1.3. Diameter	81mm
2. Type:	Illuminating
3. Filler:	Illuminating Pyrotechnical Composition or Flare with Parachute
4. Fuze:	Mechanical Time Super Quick or Powder Train Super Quick or Electronic Time
5. Body:	
5.1. Material	Aluminum Alloy or Forged Steel or Cast Iron
5.2. Color	White with Black Markings
6. Primer:	Percussion
7. Propelling Charge:	Manufacturer's Standard
8. Number of Charges:	P+4 (min)
9. Performance:	
9.1. Maximum Range	The range shall not be less than 3,000 meters
9.2. Chamber Pressure	Manufacturer's Standard
9.3. Muzzle Velocity	Manufacturer's Standard
9.4. Illumination (min)	
9.4.1. Burning Time	40 seconds (min)
9.4.2. Luminous Intensity	500,000 candela power (min)
9.5. Functional Test	The cartridge shall be free from functional defects as stated in the types and classification of defects when fired from standard weapons indicated in the weapons of application
10. Packaging:	
10.1. Inner	One (1) round per fiberboard container
10.2. Outer	Wooden Box (Termite Treated) or Plastic Box with Tamper Proof Seal
11. Markings:	
11.1. Body	a. Nomenclature **"Cartridge, 81mm: Illuminating"** or **"Ctg, 81mm: Illum"** b. Lot Number shall indicate the following: - Manufacturer's Code - Month of Production - Year of Production

Conforme:

Bidder's Company Name

Signature of Authorized Representative

Designation

Date

Page 1 of 2

Annex 4-B
(Page 2 of 2)

By 2028, a world-class Army that is a source of national pride.
TECHNICAL SPECIFICATIONS for Cartridge, 81mm: Illuminating
TS NR: ORDA18(IL-01)02-22

	c. Name or Type of Filler
	d. Date of Manufacture
11.2. Inner Packaging	a. Nomenclature **"Cartridge, 81mm: Illuminating"** or **"Ctg, 81mm: Illum"**
	b. Lot Number shall indicate the following: - Manufacturer's Code - Month of Production - Year of Production
	c. Name or Type of Filler
11.3. Outer Packaging	a. Philippine Army
	b. PH Government Property
	c. Nomenclature **"Cartridge, 81mm: Illuminating"** or **"Ctg, 81mm: Illum"**
	d. Lot Number shall indicate the following: - Manufacturer's Code - Month of Production - Year of Production
	e. Manufacturer
	f. Quantity per Box
	g. Weight (N.E.W and Gross)
	h. Dimensions in metric units (Length x Width x Height)
	i. Hazard Classification Code
12. Other Requirements:	
12.1. Firing Table	Required for every outer packaging
12.2. Technical Data Sheet	

PREPARED BY:

DARREL P MARIANO
Major (OS) PA
Chief, PRB, OACOCS

ROXANNE R SANTOS
Major (OS) PA
Chief, FB, OACOCS

RECOMMENDED BY:

LEO EDWARD Y CARANTO
Colonel MNSA (OS) PA
ACOCS

APPROVED BY:

ROMEO S BRAWNER JR
Lieutenant General PA
Commanding General

Honor. Patriotism. Duty.

Page 2 of 2

Conforme:

Bidder's Company Name

Signature of Authorized Representative

Designation

Date

Annex 4-C
(Page 1 of 13)

HEADQUARTERS
PHILIPPINE ARMY
OFFICE OF THE ARMY CHIEF ORDNANCE AND CHEMICAL SERVICE
Fort Andres Bonifacio, Metro Manila

TAP NR: ORDA18(IL-01)02-22

MAR 2 1 2022

TEST AND ACCEPTANCE PROCEDURES
Cartridge, 81mm: Illuminating

1. REFERENCES:

1.1. Technical Specifications for Ctg, 81mm: Illuminating dated _____.

1.2. Sampling Plans for the Test and Acceptance of Ammunition (For Hand/Rifle/Special Grenades; Mortar and Artillery Ammunition) dated 23 November 2018.

2. OBJECTIVES:

2.1. To determine the functional reliability of the ammunition.
2.2. To determine the stability of the ammunition when subjected to adverse field and storage conditions.
2.3. To determine user safety when ammunition is fired in various environmental conditions.
2.4. To ascertain compliance to standards and specifications.

3. GUIDELINES:

3.1. The manufacturer/supplier shall ensure that the complete quantity stated in the contract is packed/palletized prior to the inspection.
3.2. Technical inspection and test shall be conducted on the representative samples of the lot through visual/physical, weight and dimensional measurements to determine the over-all workmanship, markings, color and appropriate packaging of the items.
3.3. Functional Test will be done to determine the functional performance of the ammunition.
3.4. Results obtained shall be recorded and evaluated to determine the compliance of the items to technical specifications and as basis for acceptance or rejection of the lot or lots.

4. PROCEDURES:

4.1. COMPLETENESS INSPECTION AND RANDOM SAMPLING:

The ... ttee (TIAC) for Ordnance-Firepower/ Pre-D... ompleteness of the goods and conduct ran... amples shall be properly segregated, pack... **Para 4.3 – Allocation of Representative S...**

Conforme:

Bidder's Company Name

Signature of Authorized Representative

Designation

Date

Annex 4-C
(Page 2 of 13)

4.2. TEST AND INSPECTION PARAMETERS:

4.2.1. VISUAL INSPECTION:

4.2.1.1. FOR THE PACKAGING:

4.2.1.1.1. Purpose: This non-destructive test shall be performed to determine the overall workmanship, conformity to technical specifications of the packaging and its markings to ensure that the inspected item shall be free from defects and meet the requirements of the Philippine Army.

4.2.1.1.2. Procedures:

4.2.1.1.2.1. Visually check the packaging.

4.2.1.1.2.2. Inspect the presence and appropriateness of the markings.

4.2.1.1.2.3. Inspect for signs of deterioration, condition of handles, loose, missing or incorrect positioned parts.

4.2.1.1.2.4. Check for the compliance of the packaging material using appropriate instruments that will precisely identify the composition of the materials.

4.2.1.1.2.5. Observations shall be recorded.

4.2.1.1.3. Standard: The packaging shall be free from defects as stated in the **Types and Classifications of Defects- Visual Inspection- Packaging.**

4.2.1.2. FOR THE CARTRIDGES:

4.2.1.2.1. Purpose: This non-destructive test shall be performed to determine the overall workmanship, conformity to technical specifications of the cartridges and to ensure that said items are in accordance with the requirements of the Philippine Army.

4.2.1.2.2. Procedures:

4.2.1.2.2.1. The sample round, its parts or components shall be visually inspected for its compliance to the technical data requirements.

4.2.1.2.2.2. Inspect for the presence and appropriateness of markings.

4.2.1.2.2.3. Each sample shall be examined for presence/ evidence of defect on workmanship.

4.2.1.2.2.4. Observations shall be recorded.

4.2.1.2.3. Standard: The cartridge shall be free from defects as stated in the **Types and Classifications of Defects- Visual Inspection- Ammunition.**

4.2.2. WEIGHT AND DIMENSIONAL INSPECTION:

4.2.2.1. Purpose: This test shall be performed to determine compliance of the cartridge to weight and dimensional requirements in the technical specifications and meet the requirements of the Philippine Army.

Conforme:

Bidder's Company Name

Signature of Authorized Representative

Designation

Date

Annex 4-C
(Page 3 of 13)

4.2.2.2. Procedures:

4.2.2.2.1. The sample round, its parts or components shall be measured by using a weighing scale, go and no-go gages, vernier caliper, micrometer caliper or other appropriate measuring instruments. **All measuring instruments shall be calibrated for a minimum of 1-year prior date of test.**

4.2.2.2.2. Weight and dimensions shall be recorded.

4.2.2.3. Standards:

4.2.2.3.1. Weight and length shall be according to specifications.

4.2.2.3.2. Lower and upper limits of the diameter shall be according to manufacturer's standard.

4.2.3. PERFORMANCE TESTS:

A series of tests shall be performed to ensure that the cartridge will efficiently function and perform accordingly based on the established standards and specifications when subjected to various methods of actuation simulating field usage and storage conditions.

4.2.3.1. MAXIMUM RANGE TEST:

4.2.3.1.1. Purpose: This test shall be performed to determine the conformity of the ammunition with the maximum range requirement in the technical specifications.

4.2.3.1.2. Procedures:

4.2.3.1.2.1. Impact area/ target shall be designated.

4.2.3.1.2.2. The sample cartridges shall be conditioned at 70ºF ± 2ºF for a minimum of two (2) hours.

4.2.3.1.2.3. Using a standard test weapon, the ammunition shall be fired at full charge.

4.2.3.1.2.4. Measure the range using a doppler radar or equivalent measuring instruments.

4.2.3.1.2.5. Observations shall be recorded.

4.2.3.1.2.6. This test may be carried out simultaneously with the chamber pressure, muzzle velocity, smoke screen duration and functional test.

4.2.3.1.3. Standards:

4.2.3.1.3.1. The maximum range of the cartridge shall be according to specifications.

4.2.3.1.3.2. The cartridge shall be free from defects as stated in the **Types and Classifications of Defects- Functional Test**

4.2.3.2. CHAMBER PRESSURE TEST:

4.2.3.2.1. Purpose: This test shall be performed to determine the conformity of the ammunition with the chamber pressure requirement in the technical specifications.

4.2.3.2.2. Procedures:

4.2.3.2.2.1. Impact area/ target shall be designated.

Conforme:

Bidder's Company Name

Signature of Authorized Representative

Designation

Date

Annex 4-C
(Page 4 of 13)

4.2.3.2.2.2. Sample cartridge s shall be conditioned at 70ºF ± 2ºF for at least two (2) hours.

4.2.3.2.2.3. Using a standard test weapon, the ammunition shall be fired at full charge.

4.2.3.2.2.4. Measure the chamber pressure during firing using any appropriate measuring instruments.

4.2.3.2.2.5. Observations shall be recorded.

4.2.3.2.2.6. This test may be carried out simultaneously with the maximum range, muzzle velocity, smoke screen duration and functional test.

4.2.3.2.3. Standards:

4.2.3.2.3.1. The chamber pressure of the cartridge shall be according to specifications.

4.2.3.2.3.2. The cartridge shall be free from defects as stated in the **Types and Classifications of Defects- Functional Test**.

4.2.3.3. MUZZLE VELOCITY TEST:

4.2.3.3.1. Purpose: This test shall be performed to determine the conformity of the ammunition with the muzzle velocity requirement in the technical specifications.

4.2.3.3.2. Procedures:

4.2.3.3.2.1. Impact area/ target shall be designated.

4.2.3.3.2.2. Sample cartridge s shall be conditioned at 70ºF ± 2ºF for at least two (2) hours.

4.2.3.3.2.3. Using a standard test weapon, the ammunition shall be fired at full charge.

4.2.3.3.2.4. Measure the velocity produced during firing using doppler radar or any appropriate measuring instruments.

4.2.3.3.2.5. Observations shall be recorded.

4.2.3.3.2.6. This test may be carried out simultaneously with the maximum range, chamber pressure, smoke screen duration and functional test.

4.2.3.3.3. Standards:

4.2.3.3.3.1. The muzzle velocity of the cartridge shall be according to specifications.

4.2.3.3.3.2. The cartridge shall be free from defects as stated in the **Types and Classifications of Defects- Functional Test**.

4.2.3.4. BURNING TIME TEST:

4.2.3.4.1. Purpose: This test shall be performed to determine the conformity of the ammunition with the smoke screen duration requirement in the technical specifications.

4.2.3.4.2. Procedures:

4.2.3.4.2.1. Impact area/ target shall be designated.

4.2.3.4.2.2. Sample cartridge s shall be conditioned at 70ºF ± 2ºF for at least two (2) hours.

4.2.3.4.2.3. Using a standard test weapon, the ammunition shall be fired.

Conforme:

Bidder's Company Name

Signature of Authorized Representative

Designation

Date

Annex 4-C
(Page 5 of 13)

4.2.3.4.2.4. Upon visibility of emission, measure the duration of smoke using a stopwatch or any appropriate instrument.

4.2.3.4.2.5. Observations shall be recorded.

4.2.3.4.2.6. This test may be carried out simultaneously with the maximum range, chamber pressure, muzzle velocity and functional test.

4.2.3.4.3. Standards:

4.2.3.4.3.1. Smoke screen duration of the cartridge shall be according to specifications.

4.2.3.4.3.2. The cartridge shall be free from defects as stated in the **Types and Classifications of Defects- Functional Test.**

4.2.3.5. FUNCTIONAL TEST:

4.2.3.5.1. Purpose: The tests shall be performed to ascertain the complete functional performance of the ammunition and ensure that there shall be no malfunction attributed to the ammunition.

4.2.3.5.2. Procedures:

4.2.3.5.2.1. Impact area/ target shall be designated.

4.2.3.5.2.2. Sample cartridge shall be conditioned at 70ºF ± 2ºF for at least two (2) hours.

4.2.3.5.2.3. Using a standard test weapon, the ammunition shall be fired per increment charge.

4.2.3.5.2.4. Observations shall be recorded.

4.2.3.5.2.5. This test may be carried out simultaneously with the maximum range, chamber pressure, muzzle velocity, burning time and smoke screen duration test.

4.2.3.5.3. Standard: The cartridge shall be free from defects as stated in the **Types and Classifications of Defects- Functional Test.**

4.2.3.6. LUMINOUS INTENSITY TEST:

4.2.3.6.1. Purpose: This test shall be performed to determine the conformance of the cartridge to the illumination requirement in the technical specifications.

4.2.3.6.2. Procedures:

4.2.3.6.2.1. Appropriate test area shall be designated.

4.2.3.6.2.2. Sample cartridge s shall be conditioned at 70ºF ± 2ºF for at least two (2) hours.

4.2.3.6.2.3. The ammunition shall be fired or actuated using applicable procedures.

4.2.3.6.2.4. Using appropriate instrument/s, measure the amount of illumination produced by the ammunition.

4.2.3.6.2.5. Observations shall be recorded.

4.2.3.6.3. Standard: Illumination produced by cartridge shall be according to specifications.

Conforme:

Bidder's Company Name

Signature of Authorized Representative

Designation

Date

Annex 4-C
(Page 6 of 13)

4.3. ALLOCATION AND CRITERIA OF REPRESENTATIVE SAMPLES: (Based on the attached Sampling Plans for Artillery Ammunition)

Table – 1

TYPE OF INSPECTION/ TEST	NR OF SAMPLES	CRITERIA
1. Visual Inspection: (Representative samples)		
1.1. For the Packaging	100% of the Quantity of samples indicated in Table 1 corresponding to the total number of packaging for lot size.	Sampling Plan for Test and Acceptance of Ammunition for Hand/Rifle/Special Grenades; Mortar; Artillery Ammunition. (Attached)
1.2. For the Cartridges	100% of the Quantity of samples indicated in Table 2 corresponding to the lot size.	Sampling Plan for Test and Acceptance of Ammunition for Hand/Rifle/Special Grenades; Mortar; Artillery Ammunition.
2. Weight and Dimensional Inspection: (Representative samples)		
2.1. Round Weight 2.2. Length 2.3. Diameter	100% of the quantity of samples indicated in Table 2 corresponding to the total number of lot size.	Sampling Plans for Test and Acceptance Procedure of Ammunition (For Hand/ Rifle/ Special Grenade; Mortar; Artillery Ammunition)
3. Performance Tests: (Samples to undergo the test shall be taken from the representative samples that passed the Visual, Weight and Dimensional Inspection)		
3.1. Luminous Intensity Test	1 round	Note
3.2. Maximum Range Test	100% of the quantity of samples indicated in Table 3 corresponding to the total number of lot size.	Sampling Plans for Test and Acceptance Procedure of Ammunition (For Hand/ Rifle/ Special Grenade; Mortar; Artillery Ammunition)
3.3. Chamber Pressure Test	100% of the quantity of samples indicated in Table 3 corresponding to the total number of lot size.	
3.4. Muzzle Velocity Test	100% of the quantity of samples indicated in Table 3 corresponding to the total number of lot size.	
3.5. Burning Time Test	100% of the quantity of samples indicated in Table 3 corresponding to the total number of lot size.	
3.6. Functional Test	100% of the quantity of samples indicated in Table 3 corresponding to the total number of lot size.	

Note - Failure of the cartridge to comply with the applicable standard shall be cause for rejection of the lot. If the cartridge fails in the first test, a second sample shall be tested. If the cartridge fails in the second sample, the lot shall be rejected.

5. TYPES AND CLASSIFICATIONS OF DEFECTS:

TABLE – 2

TYPES OF DEFECTS	CLASSIFICATION OF DEFECTS		
	CRIT	MAJ	MIN
::			
ccording to specifications		X	
rtridges per packaging requirement not specifications		X	
ssing and incorrectly positioned parts			X

Conforme:

Bidder's Company Name

Signature of Authorized Representative

Designation

Date

1.1.4. Incorrect, missing or illegible markings			X
1.1.5. Evidence of poor workmanship (any visual defects not mentioned above)			X
1.2. For the Cartridge:			
1.2.1. Filler:			
1.2.1.1. Filler not according to specifications		X	
1.2.2. Fuze:			
1.2.2.1. Fuze safety wire missing or unsecured	X		
1.2.2.2. Fuze type is not according to specifications		X	
1.2.2.3. Fuze not fully seated			X
1.2.2.4. Fuze not set to SQ (if applicable)			X
1.2.3. Body and Stabilizing Fin Assembly:			
1.2.3.1. Obturating ring or gas check grooves missing	X		
1.2.3.2. Fin bladed damaged or distorted	X		
1.2.3.3. Obturating ring or gas check grooves damaged		X	
1.2.3.4. Damage, cracks or splits		X	
1.2.3.5. Body material not as specified		X	
1.2.3.6. Body color not as specified		X	
1.2.3.7. Markings not as specified, missing, incomplete or illegible		X	
1.2.3.8. Glue or asphalt on bourrelet area		X	
1.2.4. Propelling Charge:			
1.2.4.1. Increment charge damaged to the extent that propellant may leak	X		
1.2.4.2. Increment charge damaged but not to the extent that propellant may leak		X	
1.2.4.3. Charge type not as specified		X	
1.2.4.4. Charge provided missing or incomplete		X	
1.2.4.5. Missing or incomplete		X	
1.2.5. Primer/Igniter:			
1.2.5.1. Primer head above flush with rear surface of fin	X		
1.2.5.2. Ignition cartridge missing or inverted	X		
1.2.5.3. Primer/ignition charge not as specified		X	
1.2.6. Any component damaged or incorrectly assembled part other than mentioned above		X	
2. Weight and Dimensional Inspection:			
2.1. Round weight not within the specifications		X	
2.2. Length not within the specifications		X	
2.3. Lower and upper limits of diameter not within the manufacturer's standard		X	
3. Performance Test:			
3.1. Maximum Range not within the specifications		X	
3.2. Chamber Pressure not within the specifications		X	
3.3. Muzzle velocity not within the specifications		X	
3.4. Burning time not according to specifications		X	
4. Functional Test:			
4.1. Premature detonation	X		
4.2. Misfire	X		
4.3. Dud/Failure to function		X	
4.4. Other defects attributable to the cartridge		X	

6. ACCEPTANCE AND REJECTION:

Acceptability of lot/s shall be determined by using the Note/s under the Criteria and Allocation of Samples and Acceptance Quality Limit (AQL) indicated in the attached

Conforme:

Bidder's Company Name

Signature of Authorized Representative

Designation

Date

Annex 4-C
(Page 8 of 13)

Sampling Plan Tables for Visual Inspection, Weight and Dimensional Inspection, Performance Test, and Functional Test.

7. RESULT:

The result of the test based on the above criteria shall be the basis of the Philippine Army Technical Inspection and Acceptance Committee (PA-TIAC) for Ordnance-Firepower/Pre-Delivery Inspection (PDI) Team in the acceptance or rejection of the goods/items.

PREPARED BY:

DARREL P MARIANO
Major (OS) PA
Chief, PRB

ROXANNE R SANTOS
Major (OS) PA
Chief, FB

APPROVED BY:

LEO EDWARD Y CARANTO
Colonel MNSA (OS) PA
Chief

Conforme:

Bidder's Company Name

Signature of Authorized Representative

Designation

Date

Annex 4-C
(Page 9 of 13)

By 2028, a world-class Army that is a source of national pride.

SAMPLING PLAN FOR THE TEST AND ACCEPTANCE OF AMMUNITION
(For Hand/Rifle Special Grenades, Mortar Ammunitions, Artillery Ammunitions)

HEADQUARTERS
PHILIPPINE ARMY
OFFICE OF THE ARMY CHIEF ORDNANCE AND CHEMICAL SERVICE
Fort Andres Bonifacio, Metro Manila

NOV 2 3 2018

SAMPLING PLANS FOR THE TEST AND ACCEPTANCE OF AMMUNITION
(For Hand/Rifle/Special Grenades; Mortar Ammunition; Artillery Ammunition)

I. REFERENCES:

a. ANZI/ASQ Z1.4-2003: Sampling Procedures and Tables for Inspection by Attributes.

b. Military Standard 105E dtd 10 May 89, Subject: Sampling Procedures and Tables for Inspection by Attributes.

II. ACCEPTANCE AND REJECTION:

Acceptability of lot/s shall be determined by using the Acceptance Quality Limit (AQL) indicated in the following Sampling Plan Tables for Visual Inspection, Dimensional Inspection, Performance Test, and Functional Test.

If the number of defects found in the first sample is equal to or less than the first **Acceptance (Ac)** number, the lot or batch shall be accepted. If the number of defects found in the first sample is equal to or greater than the first **Rejection (Re)** number, the lot or batch shall be rejected.

If the number of defects found in the first sample is between the first **Acceptance (Ac)** and **Rejection (Re)** numbers, second samples shall be inspected. The number of defects found in the first and second samples shall be accumulated. If the cumulative number of defects is equal to or less than the second acceptance number, the lot or batch shall be accepted. If the cumulative number of defects is equal to or greater than the second rejection number, the lot or batch shall be rejected.

A. For Visual Inspection of Packaging: Double Sampling Plan for Normal Inspection of General Inspection Level II

Table 1

Lot Size	Sample Size Code	Sampling	Nr of Samples	Classification of Defects (AQL)			
				Major (6.5)		Minor (10.0)	
				Ac	Re	Ac	Re
		1	2	0	1	0	2
		2	2	-	-	1	2

Conforme:

Bidder's Company Name

Signature of Authorized Representative

Designation

Date

nor. Patriotism. Duty

Annex 4-C
(Page 10 of 13)

By 2028, a world-class Army that is a source of national pride.

SAMPLING PLAN FOR THE TEST AND ACCEPTANCE OF AMMUNITION
(For Hand/Rifle/Special Grenades; Mortar Ammunitions; Artillery Ammunitions)

9 – 15	B	1	2	0	1	0	2
		2	2	-	-	1	2
16 - 25	C	1	3	0	2	0	2
		2	3	1	2	1	2
26 - 50	D	1	5	0	2	0	3
		2	5	1	2	3	4
51 - 90	E	1	8	0	3	1	4
		2	8	3	4	4	5
91 - 150	F	1	13	1	4	2	5
		2	13	4	5	6	7
151 - 280	G	1	20	2	5	3	7
		2	20	6	7	8	9
281 - 500	H	1	32	3	7	5	9
		2	32	8	9	12	13
501 – 1,200	J	1	50	5	9	7	11
		2	50	12	13	18	19
1,201 – 3,200	K	1	80	7	11	11	16
		2	80	18	19	26	27
3,201 – 10,000	L	1	125	11	16	11	16
		2	125	26	27	26	27
10,001 - 35000	M	1	200	11	16	11	16
		2	200	26	27	26	27
35,001 – 150,000	N	1	315	11	16	11	16
		2	315	26	27	26	27
150,001 – 500,000	P	1	500	11	16	11	16
		2	500	26	27	26	27
500,001 and over	Q	1	800	11	16	11	16
		2	800	26	27	26	27

B. For Visual and Dimensional Inspection of Ammunition: Double Sampling Plan for Normal Inspection of General Inspection Level II

Table 2

Lot Size	Sample Size Code	Sampling	Nr of Samples	Classification of Defects (AQL)					
				Critical (.04)		Major (2.5)		Minor (4.0)	
				Ac	Re	Ac	Re	Ac	Re
2 - 8	A	1	2	0	1	0	1	0	1
		2	-	-	-	-	-	-	-
9 - 15	B	1	2	0	1	0	1	0	1
		2	-	-	-	-	-	-	-
16 - 25	C	1	3	0	1	0	1	0	1
		2	-	-	-	-	-	-	-
26 - 50	D	1	5	0	1	0	1	1	2
		2	5	-	-	-	-	2	3

Honor. Patriotism. Duty.

Page 2 of 4

Conforme:

Bidder's Company Name

Signature of Authorized Representative

Designation

Date

Annex 4-C
(Page 11 of 13)

By 2028, a world-class Army that is a source of national pride.

SAMPLING PLAN FOR THE TEST AND ACCEPTANCE OF AMMUNITION
(For Hand/Rifle/Special Grenades; Mortar Ammunitions; Artillery Ammunitions)

500,001 and over	H	1	32	0	1	1	4	2	5
		2	32	-	-	4	5	6	7

III. RESULT:

The result of the test based on the above criteria shall be the basis of the Philippine Army Technical Inspection and Acceptance Committee (PA-TIAC) for Ordnance-Firepower/Pre-Delivery Inspection (PDI) Team in the acceptance or rejection of the goods/items.

PREPARED BY:

DARREL P MARIANO
Major, (OS) PA
Chief, PRB

APPROVED BY:

FLORANTE P SISON
Colonel, MNSA PA
Chief

Honor. Patriotism. Duty.

Page 4 of 4

Conforme:

Bidder's Company Name

Signature of Authorized Representative

Designation

Date

Annex 4-C
(Page 12 of 13)

By 2028, a world-class Army that is a source of national pride.

HEADQUARTERS
PHILIPPINE ARMY
OFFICE OF THE ARMY CHIEF ORDNANCE AND CHEMICAL SERVICE
Fort Andres Bonifacio, Metro Manila

SAMPLE DIAGRAM FOR MARKINGS ON PACKAGING OF AMMUNITION

INNER PACKAGING: (Sample Illustration, Diagram Not in Scale)

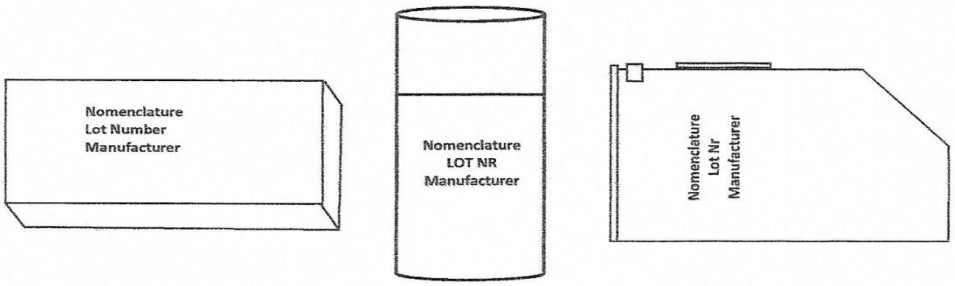

INTERMEDIATE PACKAGING: (Sample Illustration, Diagram Not in Scale)

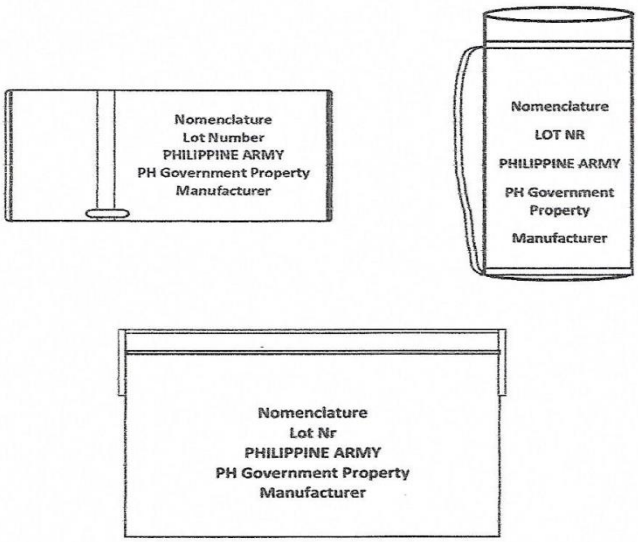

Honor. Patriotism. Duty.

Page 1 of 2

Conforme:

Bidder's Company Name

Signature of Authorized Representative

Designation

Date

Annex 4-C
(Page 13 of 13)

By 2028, a world-class Army that is a source of national pride.

OUTER PACKAGING: (Sample Illustration, Diagram Not in Scale)

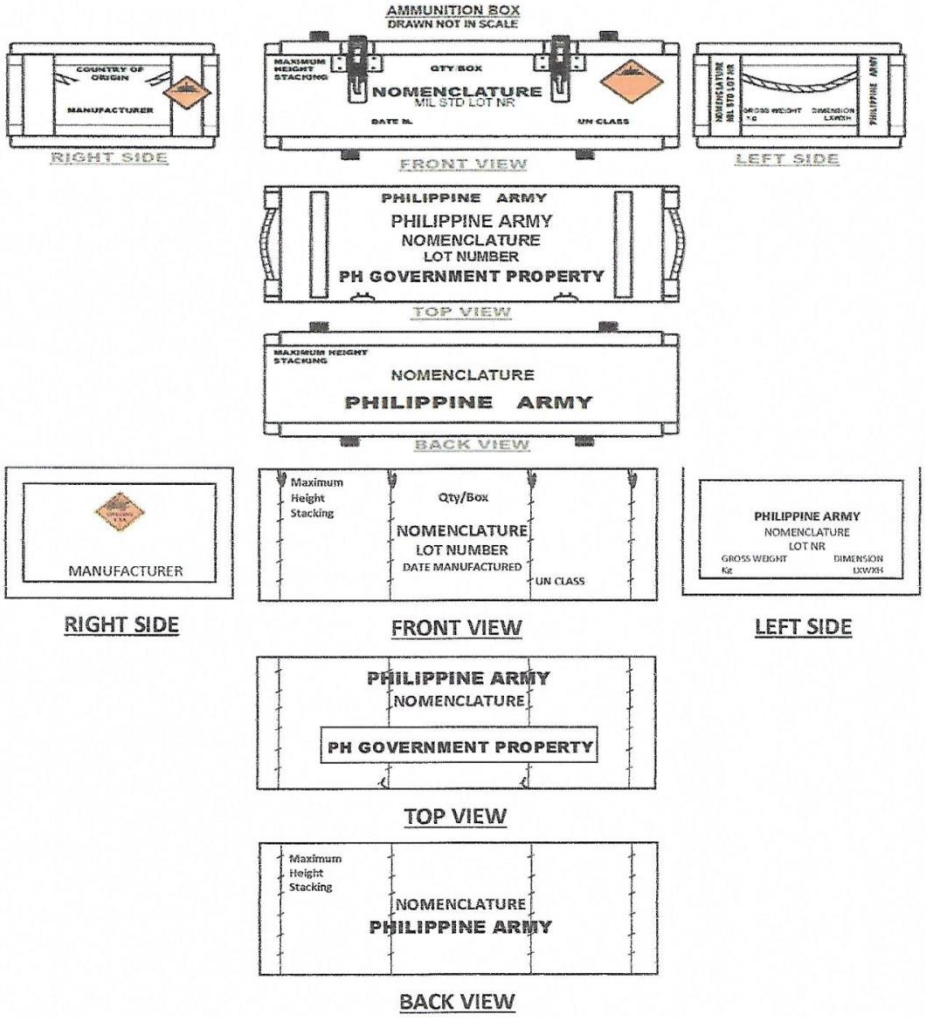

Note: The illustrated diagram is just an example purposely to serve as reference. Placement, font size, and font style are manufacturer's standard. Refer to Technical Specification for the minimum required markings.

PREPARED BY:

DARREL P MARIANO
MAJ (OS) PA
Chief, PRB

APPROVED BY:

FLORANTE P SISON
Colonel, MNSA PA
Chief

Honor. Patriotism. Duty.

Page **2** of **2**

Conforme:

Bidder's Company Name

Signature of Authorized Representative

Designation

Date

Annex 4-D

Company Letterhead

TECHNICAL DATA SHEET

***Nomenclature of the Ammunition/Explosives:** _____
***Lot Number/s of the Ammunition/Explosives:** _____
***Month and Year of Manufacture:** _____
***Name of Manufacturer:** _____

1. **References** (If any)**:**
2. **Technical Data:** (Fill-in the required data in the table including but not limited to the dimensions, weight, components, materials, color, markings and performance of the item. Additional rows may be added to supplement the data.)

Weapons Application:	
Technical Data:	
1. Dimension and Weight:	
1.1. Round Weight	
1.2. Length	
1.3. Diameter	
2. Type:	
3. Filler:	
4. Fuze:	
5. Body:	
5.1. Material	
5.2. Color	
6. Primer:	
7. Propelling Charge:	
8. Number of Charges:	
9. Performance:	
9.1. Maximum Range	
9.2. Chamber Pressure	
9.3. Muzzle Velocity	
9.4. Illumination (min)	
9.4.1. Burning Time	
9.4.2. Luminous Intensity	
9.5. Functional Test	
10. Packaging:	
10.1. Inner	
10.2. Outer	
11. Markings:	
11.1. Body	
11.2. Inner Packaging	
11.3. Outer Packaging	

Notes: a. This is a generic format. Provide only the applicable data and other necessary information not mentioned above.
b. Provide all data related to Performance of the ammunition.

Description: State Brief Description and other details of the item
Functioning: State the functioning and theory of operation of the item

PREPARED BY:

_____
Signature over Printed Name
PRODUCTION ENGINEER/ TECHNICAL PERSONNEL

_____
Date

Annex 5

TECHNICAL BID FORM

PROCUREMENT OF CARTRIDGE, 81MM: ILLUM
FOR THE PHILIPPINE ARMY

BID REF NO. ORD PABAC2 005-23

MANUFACTURER'S CERTIFICATION ON CONFORMANCE TO THE PROJECTS TECHNICAL SPECIFICATIONS, PACKAGING, MARKINGS, TEST AND ACCEPTANCE PROCEDURES AND SAMPLING PLAN

I, _____, Production Engineer/Technical Personnel of _____(Name of Foreign Company/Bidder) hereby certify that I have read and understood each and every page of the Technical Specifications, Test and Acceptance Procedures and its Sampling Plan and AQL, Markings, and Packaging for the project, Procurement of _____for Philippine Army under Bid Ref Nr_____ copies of which we have acknowledged to have received on _____.

I/WE understand that having issued this Certification, we conform to the requirements of the above-stated Project as detailed in the Technical Specifications and other Technical documents and that, in the event that the Contract for the Project is awarded to us, we certify to complete and accomplish our obligations in accordance with, the term and conditions of the said project. This Certification is part of our Technical Bid for the above-mentioned project.

I/WE are executing this Certification to attest to the truth of the foregoing fact/s.

_____
Name

_____
Signature

PRODUCTION ENGINEER/ TECHNICAL PERSONNEL
Position in the Company

_____
Date

Annex 6

TECHNICAL BID FORM

PROCUREMENT OF CARTRIDGE 81MM: ILLUM FOR THE PHILIPPINE ARMY

BID REF NO. ORD PABAC2 005-23

SCHEDULE OF REQUIREMENTS

Lot	***Description***	***Qty***	***Unit***	***Delivery Period***	***Comply / Not Comply***
1	Cartridge, 81mm: Illum	3,000	rounds	**Two Hundred Forty (240) Calendar Days upon receipt of NTP** by the supplier, which date shall not be later than seven (7) calendar days from the issuance of NTP; should the supplier fail to comply, the delivery period shall commence.	
	Cut away model of Cartridge, 81mm: Illum	5	each		
	Firing Table	1	each per Outer Packaging		
	Technical Data Sheet (placed inside the Outer Packaging)	1	each per Outer Packaging		

Notes:
a. The delivery schedule expressed as weeks/months stipulates hereafter a delivery date which is the date of delivery to the project site.
*b. Indicate "**N/A**" for other lots not applicable in this specific bidding.*

_____
Name of Company (in print)

_____
Signature of Company Authorized Representative

_____
Name and Designation

_____
Date

ANNEX 7

Omnibus Sworn Statement

REPUBLIC OF THE PHILIPPINES)
CITY/MUNICIPALITY OF _____) S.S.

AFFIDAVIT

I, [Name of Affiant], of legal age, [Civil Status], [Nationality], and residing at [Address of Affiant], after having been duly sworn in accordance with law, do hereby depose and state that:

1. *[Select one, delete the other:]*

   [If a sole proprietorship:] I am the sole proprietor or authorized representative of [Name of Bidder] with office address at [address of Bidder];

   [If a partnership, corporation, cooperative, or joint venture:] I am the duly authorized and designated representative of [Name of Bidder] with office address at [address of Bidder];

2. *[Select one, delete the other:]*

   [If a sole proprietorship:] As the owner and sole proprietor, or authorized representative of [Name of Bidder], I have full power and authority to do, execute and perform any and all acts necessary to participate, submit the bid, and to sign and execute the ensuing contract for [Name of the Project] of the [Name of the Procuring Entity], as shown in the attached duly notarized Special Power of Attorney;

   [If a partnership, corporation, cooperative, or joint venture:] I am granted full power and authority to do, execute and perform any and all acts necessary to participate, submit the bid, and to sign and execute the ensuing contract for [Name of the Project] of the [Name of the Procuring Entity], as shown in the attached [state title of attached document showing proof of authorization (e.g., duly notarized Secretary's Certificate, Board/Partnership Resolution, or Special Power of Attorney, whichever is applicable;)];

3. [Name of Bidder] is not "blacklisted" or barred from bidding by the Government of the Philippines or any of its agencies, offices, corporations, or Local Government Units, foreign government/foreign or international financing institution whose blacklisting rules have been recognized by the Government Procurement Policy Board, **by itself or by relation, membership, association, affiliation, or controlling interest with another blacklisted person or entity as defined and provided for in the Uniform Guidelines on Blacklisting;**

4. Each of the documents submitted in satisfaction of the bidding requirements is an authentic copy of the original, complete, and all statements and information provided therein are true and correct;

5. [Name of Bidder] is authorizing the Head of the Procuring Entity or its duly authorized representative(s) to verify all the documents submitted;

6. *[Select one, delete the rest:]*

   [If a sole proprietorship:] The owner or sole proprietor is not related to the Head of the Procuring Entity, members of the Bids and Awards Committee (BAC), the Technical Working Group, and the BAC Secretariat, the head of the Project Management Office or the end-user unit, and the project consultants by consanguinity or affinity up to the third civil degree;

   [If a partnership or cooperative:] None of the officers and members of *[Name of Bidder]* is related to the Head of the Procuring Entity, members of the Bids and Awards Committee (BAC), the Technical Working Group, and the BAC Secretariat, the head of the Project Management Office or the end-user unit, and the project consultants by consanguinity or affinity up to the third civil degree;

   [If a corporation or joint venture:] None of the officers, directors, and controlling stockholders of *[Name of Bidder]* is related to the Head of the Procuring Entity, members of the Bids and Awards Committee (BAC), the Technical Working Group, and the BAC Secretariat, the head of the Project Management Office or the end-user unit, and the project consultants by consanguinity or affinity up to the third civil degree;

7. *[Name of Bidder]* complies with existing labor laws and standards; and

8. *[Name of Bidder]* is aware of and has undertaken the responsibilities as a Bidder in compliance with the Philippine Bidding Documents, which includes:

   a. Carefully examining all of the Bidding Documents;
   b. Acknowledging all conditions, local or otherwise, affecting the implementation of the Contract;
   c. Making an estimate of the facilities available and needed for the contract to be bid, if any; and
   d. Inquiring or securing Supplemental/Bid Bulletin(s) issued for the *[Name of the Project]*.

9. *[Name of Bidder]* did not give or pay directly or indirectly, any commission, amount, fee, or any form of consideration, pecuniary or otherwise, to any person or official, personnel or representative of the government in relation to any procurement project or activity.

10. **In case advance payment was made or given, failure to perform or deliver any of the obligations and undertakings in the contract shall be sufficient grounds to constitute criminal liability for Swindling (Estafa) or the commission of fraud with unfaithfulness or abuse of confidence through misappropriating or converting any payment received by a person or entity under an obligation involving the duty to deliver certain goods or services, to the prejudice of the public and the government of the Philippines pursuant to Article 315 of Act No. 3815 s. 1930, as amended, or the Revised Penal Code.**

IN WITNESS WHEREOF, I have hereunto set my hand this __ day of ___, 20__ at _____, Philippines.

_____
Bidder's Representative/Authorized Signatory

SUBSCRIBED AND SWORN to before me this ___ day of *[month] [year]* at *[place of execution],* Philippines. Affiant/s is/are personally known to me and was/were identified by me through competent evidence of identity as defined in the 2004 Rules on Notarial Practice (A.M. No. 02-8-13-SC). Affiant/s exhibited to me his/her [insert type of government identification card used], with his/her photograph and signature appearing thereon, with no. _____ issued on ____ at _____.

Witness my hand and seal this ___ day of *[month] [year]*.

NAME OF NOTARY PUBLIC
Serial No. of Commission _____
Notary Public for _____ until _____
Roll of Attorneys No. _____
PTR No. _____ *[date issued], [place issued]*
IBP No. _____ *[date issued], [place issued]*

Doc No: _____
Page No: _____
Book No: _____
Series of: _____

* This form will not apply for WB funded projects.

Annex 8

(Bidder's Company Letterhead)

WARRANTY UNDERTAKING

PROCUREMENT OF CARTRIDGE, 81MM: ILLUM
FOR THE PHILIPPINE ARMY

BID REF NO. ORD PABAC2 005-23

I/We, (Name) , (Title/Capacity) , the duly registered Philippine-based company of (Company/Bidder) , hereby commits that should we be awarded the contract, we will issue a Warranty Certificate in favor of the Philippine Army (PA) valid for at least one (1) year from date of final acceptance.

This Undertaking shall form part of the Technical Requirements for the aforesaid procurement project

_____
Signature of Company Representative

_____
Name & Designation

_____
Date

Annex 9

Bidder's Company Letterhead

PROCUREMENT OF CARTRIDGE, 81MM: ILLUM
FOR THE PHILIPPINE ARMY

BID REF NO. ORD PABAC2 005-23

CERTIFICATE OF NET FINANCIAL CONTRACTING CAPACITY
(PLS SHOW FIGURES AT HOW YOU ARRIVED AT THE NFCC)

This is to certify that our Net Financial Contracting Capacity (NFCC) is **Philippine Pesos** _____(**PhP** _____) which is at least equal to the total ceiling price we are bidding. The amount is computed as follows;

CA	=	Current Assets	PhP
Less:			-
CL	=	Current Liabilities	_____
		Sub-total 1	PhP
			X 15
		Sub-total 2	PhP
Less:			-
C	=	Value of all outstanding or uncompleted portions of the projects under on-going contracts, including awarded contracts yet to be started coinciding with the contract for this project.	PhP
		NFCC	**PhP**

Issued this _____day of _____, 20____.

CERTIFIED CORRECT:

_____
Name and Signature of Authorized Representative

_____
Position

_____
Date

Annex 10

(NAME OF BANK)
COMMITTED LINE OF CREDIT

Date: _____

Philippine Army Bids and Awards Committee
Fort Andres Bonifacio, Metro Manila

CONTRACT/PROJECT :_____
COMPANY FIRM :_____
ADRESS :_____
BANK/FINANCING INSTITUTION :_____
ADRESS :_____
AMOUNT :_____

This is to certify that the above Bank/Financing Institution with Business address indicated above, commits to provide the (Supplier/Distributor/Manufacturer/Contractor), if awarded the above-mentioned Contract, a credit line in the amount specified above which shall be exclusively used to finance the performance of the above-mentioned contract subject to the terms, conditions and requirements.

The credit line shall be available within fifteen (15) calendar days after receipt by the Supplier/Distributor/Manufacturer/Contractor of the Notice of Award and such line of credit shall be maintained until issuance of the Certificate of Acceptance.

This Certification is being issued in favor of said (Supplier/Distributor/Manufacturer/Contractor) in connection with the bidding requirement of (Name of Procuring Entity) for the above-mentioned Contract. We are aware that any false statement issued by us make us liable for perjury.

This Committed line of credit cannot be terminated or cancelled without the prior written approval of the Philippine Army.

_____
Name and Signature of Authorized Financing Institution Office

_____
Official Designation

Concurred by:

_____
Name and Signature of Supplier/Distributor/Manufacturer/Contractor authorized representative

_____
Official Designation

SUBSCRIBED AND SWORN TO BEFORE ME this _____day of _____at _____, Philippines. Affiant exhibited to me his/her competent Evidence of identity (as defined by the 2004 Rules on Notarial Practice _____ issued _____ at _____, Philippines.

Doc No: _____ NOTARY PUBLIC
Page No: _____
Book No: _____
Series of: _____

<u>Amount should be machine validated</u>

Annex 11-A

<u>PROTOCOL/UNDERTAKING OF AGREEMENT TO ENTER INTO JOINT VENTURE</u>

This **PROTOCOL/UNDERTAKING OF AGREEMENT TO ENTER INTO JOINT VENTURE** executed by: _____, A sole proprietorship/corporation duly organized and existing under and by virtue of the laws of the Philippines, with offices located at _____, represented herein by its _____, hereinafter referred to as _____.,

-and-

_____ A sole proprietorship/corporation duly organized and existing under and by virtue of the laws of the Philippines, with offices located at _____, represented herein by its _____, hereinafter referred to as _____.,

For submission to the **Philippine Army Bids and Awards Committee (PABAC**), pursuant to Section 23.1 (b) of the Revised Implementing Rules and Regulations (IRR) of Republic Act (RA) No 9184.

WITNESSETH That:
WHEREAS, the parties desire to participate as a joint venture in the public bidding that will be conducted by the PABAC pursuant to Republic Act (RA) No 9184 and its Revised Implementing Rules and Regulations (IRR) with the following particulars:

Bid Reference No.	
Name/Title of Procurement Project	
Approved Budget for the Contract	

NOW THETREFORE, in consideration of the foregoing, the Parties undertake to enter into a JOINT VENTURE and sign a Joint Venture Agreement relative to their joint cooperation for this bid project, in the event that their bid is successful, furnishing the PABAC a duly signed and notarized copy thereof within ten (10) calendar days from receipt of Notice from the BAC that our bid has the lowest calculated responsive bid or highest rated responsive bid (as the case may be).

For purposes of this bid project, and unless modified by the terms of the Joint Venture Agreement, the following party shall be the authorized representative of the JV:

JV Partner (Name of Company)

_____

Authorized Rep of the JV Partner: (Per attached Secretary's Certificate)

_____

Name

_____

Designation

That furthermore, the parties agree to be bound jointly and severally under the said Joint Venture Agreement;

THAT Finally, failure on our part to enter into the Joint Venture and/or sign the Joint Venture Agreement for any reason after the Notice of Award has been issued by shall be a ground for non-issuance by PABAC of the Notice to Proceed, forfeiture of our bid security and such other administrative and/or civil liabilities as may be imposed by PABAC under the provisions of Republic Act (RA) No 9184 and its Revised Implementing Rules and Regulations (IRR) , without any liability on the part of PABAC.

This undertaking shall form an integral part of our Eligibility documents for the above-cited project.

IN WITNESS WHEREOF, the parties have signed this Protocol/Undertaking on the date first above-written.

[JURAT]

SUBSCRIBED AND SWORN TO BEFORE ME this _____day of _____at _____, Philippines. Affiant exhibited to me his/her competent Evidence of identity (as defined by the 2004 Rules on Notarial Practice _____ issued _____ at _____, Philippines.

Doc No: _____ NOTARY PUBLIC
Page No: _____
Book No: _____
Series of: _____

Annex 11-B

Bidder's Company Letterhead

PROCUREMENT OF CARTRIDGE, 81MM: ILLUM
FOR THE PHILIPPINE ARMY

BID REF NO. ORD PABAC2 005-23

PABAC2 Chairperson
Office of the PA Bids and Awards Committee 2
Fort Andres Bonifacio, Metro Manila

Subject: **Statement of Inapplicability of Joint Venture Agreement**

Dear PABAC2 Chairperson,

This is to inform you that ***[insert name of supplier or bidder]*** is not joining as a Joint Venture for this project, thus, the Joint Venture Agreement is not applicable.

Thank you and more power.

Truly Yours,

Name and Signature of Authorized Representative

CERTIFIED CORRECT:

_____
Name and Signature of Authorized Representative

_____
Position

_____
Date

Annex 12-A

(Bidder's Company Letterhead)

PROCUREMENT OF CARTRIDGE, 81MM: ILLUM
FOR THE PHILIPPINE ARMY

BID REF ORD PABAC2 005-23

BID FORM

Date : _____
Project Identification No. :
_____

To: [*name and address of Procuring Entity*]

Having examined the Philippine Bidding Documents (PBDs) including the Supplemental or Bid Bulletin Numbers [*insert numbers*], the receipt of which is hereby duly acknowledged, we, the undersigned, offer to [*supply/deliver/perform*] [*description of the Goods*] in conformity with the said PBDs for the sum of [total Bid amount in words and figures] or the total calculated bid price, as evaluated and corrected for computational errors, and other bid modifications in accordance with the Price Schedules attached herewith and made part of this Bid. The total bid price includes the cost of all taxes, such as, but not limited to: [*specify the applicable taxes, e.g. (i) value added tax (VAT), (ii) income tax, (iii) local taxes, and (iv) other fiscal levies and duties*], which are itemized herein or in the Price Schedules,

If our Bid is accepted, we undertake:

a. to deliver the goods in accordance with the delivery schedule specified in the Schedule of Requirements of the Philippine Bidding Documents (PBDs);

b. to provide a performance security in the form, amounts, and within the times prescribed in the PBDs;

c. to abide by the Bid Validity Period specified in the PBDs and it shall remain binding upon us at any time before the expiration of that period.

Until a formal Contract is prepared and executed, this Bid, together with your written acceptance thereof and your Notice of Award, shall be binding upon us.

We understand that you are not bound to accept the Lowest Calculated Bid or any Bid you may receive.

We certify/confirm that we comply with the eligibility requirements pursuant to the PBDs.

The undersigned is authorized to submit the bid on behalf of [*name of the bidder*] as evidenced by the attached [*state the written authority*].

We acknowledge that failure to sign each and every page of this Bid Form, including the attached Schedule of Prices, shall be a ground for the rejection of our bid.

Name: _____
Legal capacity: _____
Signature: _____
Duly authorized to sign the Bid for and behalf of: _____
Date: _____

Annex 12-B

(Bidder's Company Letterhead)

PROCUREMENT OF CARTRIDGE, 81MM: ILLUM
FOR THE PHILIPPINE ARMY

BID REF ORD PABAC2 005-23

FINANCIAL BID FORM

Description	Qty	ABC Price		Bidder's Proposal	
		U/P	Total Price	U/P	Total Price
TOTAL BID PRICE					
Total Bid Price (Amount in Words):					
BIDDER'S UNDERTAKING I/We, the undersigned bidder, having examined the Bidding Documents including Bid Bulletins, as applicable, hereby OFFER to (supply/deliver/perform) the above-described items. I/We undertake, if our bid is accepted, to deliver the items in accordance with the terms and conditions contained in the bid documents, including the posting of the required performance security within ten (10) calendar days from receipt of Notice of Award. Until a formal contract/order confirmation is prepared and signed, this Bid is binding on us.					

Note: If the particular column is not applicable indicate **N/A**.

_____
Name of Company (in print)

_____
Signature of Company Representative

_____
Name & Designation (in print)

_____
Date

Annex 13
FORM NO. 1

(Bidder's Company Letterhead)

PROCUREMENT OF CARTRIDGE, 81MM: ILLUM
FOR THE PHILIPPINE ARMY

BID REF ORD PABAC2 005-23

For Goods Offered from Abroad

Name of Bidder _____. Invitation to Bid[2] Number _____. Page _____ of ___.

1	2	3	4	5	6	7	8	9
Item	Description	Country of origin	Qty	Unit price CIF port of entry (specify port) or CIP named place (specify border point or place of destination)	Total CIF or CIP price per item (col. 4 x 5)	Unit Price Delivered at Place (DAP)	Unit price Delivered Duty Paid (DDP)	Total Price -(if DAP col 4X7) -(If DDP col 4X8)

Note: If the particular column is not applicable indicate **dash** (**–) or zero (0),** as applicable.

_____ _____
[signature] *[in the capacity of]*

Duly authorized to sign Bid for and on behalf of _____

[2] If ADB, JICA and WB funded projects, use IFB.

Annex 13
FORM NO. 2

(Bidder's Company Letterhead)

PROCUREMENT OF CARTRIDGE, 81MM: ILLUM
FOR THE PHILIPPINE ARMY

BID REF ORD PABAC2 005-23

For Goods Offered From Within the Philippines

Name of Bidder _____. Invitation to Bid[3] Number _____. Page _____ of ___.

1	2	3	4	5	6	7	8	9	10
Item	Description	Country of origin	Quantity	Unit price EXW per item	Transportation and Insurance and all other costs incidental to delivery, per item	Sales and other taxes payable if Contract is awarded, per item	Cost of Incidental Services, if applicable, per item	Total Price, per unit (col 5+6+7+8)	Total Price delivered Final Destination (col 9) x (col 4)

Note: If the particular column is not applicable indicate **dash (–) or zero (0),** as applicable.

_____ _____
[signature] *[in the capacity of]*

Duly authorized to sign Bid for and on behalf of _____

[3] If ADB, JICA and WB funded projects, use IFB.

Republic of the Philippines

gppb

Government Procurement Policy Board